Bernie Harverson
arboricultural consultant

BJH.0541

ARBORICULTURAL METHOD STATEMENT

for
38 Bushy Mead, Widley

*-prepared on behalf of **Mrs A Allaway** –*

- November 2011-

HAVANT BOROUGH COUNCIL
2 1 NOV 2011
RECEIVED

Bernie Harverson M.Arb.
3 foxcombe cottages • south harting • west sussex • gu31 5pl
tel: 01730 825297 • mob: 07875 520881 • email: bernie.harverson@virgin.net • VAT Reg No. 881 5056 16

Bernie Harverson
arboricultural consultant

BJH.0541

ARBORICULTURAL METHOD STATEMENT (AMS)

Client	**Mrs A Allaway**
Site Location	**38 Bushy Mead, Widley**
Project Arboricultural Consultant:	Bernie Harverson *M.Arb.*,
Date Report Prepared	November 2011

Section	Subject Heading
1	INTRODUCTION & CLIENTS BRIEF
2	DOCUMENT DISCLOSURE STATEMENT
3	LAND SURVEY & TREE SURVEY - (in accordance with Section 4 of BS5837)
4	TREE CONSTRAINTS PLAN – RPA & ABOVE GROUND CONSTRAINTS - (in accordance with Section 5 of BS5837)
5	ASSESSMENT OF TREE CONSTRAINTS – AIA & DESIGN ISSUES & TREE PROXIMITY - (in accordance with Section 6 of BS5837)
6	ARBORICULTURAL METHOD STATEMENT & TREE PROTECTION PLAN - (in accordance with Section 7 of BS5837)
7	PRE – DEVELOPMENT TREE WORK & WORKING WITHIN THE RPA - (in accordance with Section 8 of BS5837)
8	CONSTRUCTION EXCLUSION ZONE : BARRIERS & GROUND PROTECTION - (in accordance with Section 9 of BS5837)
9	AVOIDING DAMAGE TO STRUCTURES BY TREES: DIRECT or INDIRECT ACTION - (in accordance with Section 10 of BS5837)

10	DEMOLITION & CONSTRUCTION IN PROXIMITY TO EXISTING TREES - (in accordance with Section 11 of BS5837)
11	SOFT LANDSCAPING WORKS - (in accordance with Sections 12; 13; 14 & 15 of BS5837)
12	MONITORING & SITE SUPERVISION
13	CONCLUSIONS
Appendices	**Subject**
BH1	Tree Survey Schedule (in accordance with – **Table 1** of BS5837) + **Figure 1** -Flow Diagram from BS5837 + Tree Survey Notes
BH2	Root Protection Area Schedule (**RPA** in accordance with – **Table 2** of BS5837)
BH3	AIA Tree Constraints Plan (**TCP**) – **BH.01/02**
BH4	Pre-Development Facilitation Tree Works Schedule (in accordance with **Section 8** of BS5837)
BH5	Tree Protection Plan–**BH.03** + BS5837 Figure 2 Diagram + Example Warning Notices
BH6	BS5837 & NJUG 10 Extracts
BH7	Qualifications & Experience

1.0 INTRODUCTION & CLIENTS BRIEF

1.1 My clients seek planning approval to re-develop the site by demolishing the existing buildings and erecting 5 residential units in its place with access road and associated parking arrangements.

1.2 My instructions come from **Mrs A Allaway** who owns the site.

1.3 I have previously prepared an Arboricultural Impact Assessment Report for this project and am now instructed to prepare a **Method Statement & Tree Protection Plan -** based on the planning layout submitted to me.

1.4 My work is compiled in accordance with the Recommendations contained within BS5837:2005 and this report follows the sequential progression through this document with Sections 7 to 15 in the **AMS & TPP.**

2.0 DOCUMENT DISCLOSURE STATEMENT

2.1 A copy of the Land Survey Topographical drawing has previously been provided to me for the purposes of my work.

2.2 A copy of the Planning Layout drawing as prepared by **Harrington Design & Bloomfield Architects – Proposed Site Plan - Ref: 10001 –SK – 101 - 1:200 at A3** has been provided to me for the purposes of my work and I rely totally on the accuracy of this drawing.

3.0 LAND SURVEY & TREE SURVEY

3.1 A Land Survey Topographical drawing has been prepared and to the best of my knowledge this accords with the requirements of BS5837 as listed at Section 4 – *Paragraphs 4.1.1 to 4.1.5.*

3.2 I conducted a full Tree Survey exercise on **9th November 2011** in accordance with the requirements of BS5837 as listed at Section 4 – *Paragraphs 4.2.1 to 4.3.7. and Cascade Chart Table 1* – a copy of the survey schedule can be viewed at **appendix BH1.**

3.3 Additional Considerations –

- *BS5837 Para .4.4.1* – **I found no trees on site that might represent a serious hazard to life or property.**
- *BS5837 Para .4.4.2* – **There are a no trees on site which are suitable candidates for transplanting.**
- *BS5837 Para .4.4.3* – **There are no veteran trees on the development site.**

4.0 TREE CONSTRAINTS PLAN – RPA & ABOVE GROUND CONSTRAINTS

4.1 The RPA for each surveyed tree and group has been calculated using the Tree Survey data and by reference to Table 2 of BS5837.

4.2 A copy of the RPA schedule can be viewed at **appendix BH2** and the data has been applied to the TCP prepared for this current scheme.

4.3 In compiling the data and applying it to the TCP full consideration has been given to BS5837 – *Paragraph 5.2.4 and items a) to e).*

4.4 In this regard it is to be noted that in respect of item *e)* if trees and groups have crown spreads which exceed the specified RPA then this has been taken into account on the TPP for those trees which are to be retained and either an increased protection zone applied to encompass the crown or where deemed appropriate *'access facilitation'* tree surgery works specified that will avoid unnecessary contact and damage from site traffic during the demolition and/or construction works.

5.0 ASSESSMENT OF TREE CONSTRAINTS –AIA & DESIGN ISSUES

5.1 At *Paragraph 6.2.2 of BS5837* there is a recommendation that *'Even if there are no trees on the site, areas for future planting should be plotted on the TCP and protected from damage, especially soil compaction due to construction activity, by the erection of barriers and/or ground protection. Where such pre –development protection is not implemented, prior remediation measures should be employed, such as soil ripping with a winged-tined plough or subsoil aeration.'* In practice this is extremely difficult to implement and the best that can be hoped for is that the ground is adequately protected and then appropriate decompaction, aeration and mulching undertaken at the completion of works during the soft landscaping works phase. The TPP may where appropriate indicate notional areas outside the RPA's where appropriate ground protection measures might be implemented to protect the ground during the course of demolition and construction works in anticipation of subsequent new tree planting.

5.2 At *Paragraph 6.2.3 of BS5837* there is a recommendation that the following matters are taken into consideration:-

a) The presence of tree preservation orders or conservation area protection.

- I am not aware of any extant **Tree Preservation Orders** covering this site and have made no investigations of my own in this respect. However the governing factor at this stage will be BS5837 but the client is advised to verify that there are no legal constraints before actioning any work advised in this report.

b) The effect that development proposals may have on the amenity value of trees, both on and near the site.

- This scheme does not involve any tree losses although shrubs and scrubby vegetation have been cleared from the central areas of the site.

c) The above and below ground constraints.

- Fully assessed and a management strategy devised – see Section 6 of this report for further information in this respect.

d) The construction of the proposed development.

- As shown on the planning layout drawings and detailed in Section 6.0 of this report.

e) Whether the design and/or construction of the proposed development can be modified to accommodate retention of trees that would otherwise be at risk or lost. This includes appropriate tree surgery works that acceptably mitigate adverse effects caused by trees.

- **NO** – this layout reflects my clients requirements to maximise the redevelopment potential of this site and in any event there is no tree loss.
- **Facilitation Pruning –** There will be a requirement for some minor facilitation pruning on this project and this is detailed under the Pre-Development Facilitation Tree Works Schedule included at Appendix BH4.

f) Infrastructure requirements, e.g. easements for underground or above ground services; highway safety and visibility splays; and other infrastructural provisions, such as substations, refuse stores, lighting, signage and CCTV requirements.

- To the best of my understanding there is no intention to transgress through RPA's with new service utility links - with the existing and any new service and communication links coming up the access drive to the north where there are no trees.
- However, NJUG 10 is included in the appendices for completeness and as a basis for further discussion, if required.

g) The end use of the space

- This is ultimately an issue for Planners to consider but in arboricultural terms there is no tree loss and the aspect of plots has been carefully considered to avoid conflict with tree crowns and shading issues.

h) Whether tree loss resulting from the development proposals can be acceptably mitigated by new tree planting.

- **YES –** there is no tree loss but tree planting enhancement is shown.

5.3 **Proximity of trees to structures**

- This is to ensure that above ground the existing shade cast by the tree crowns is reasonable and acceptable and allowance has been made for their future growth and development without there being pressure to prune or fell or to impinge on useable space.
- In this instance the retained trees are around the periphery of the site and where trees might potentially conflict with the future use of the site they have been pruned back and crown lifted.
- Overall I would see this as an acceptable situation and extremely unlikely to lead to a situation where the new owners move in and apply pressure to have the retained trees pruned or felled.

6.0 ARBORICULTURAL METHOD STATEMENT & TREE PROTECTION PLAN

6.1 The finalised planning layout drawing has been provided and an assessment made as to the viability of retaining trees as part of this layout in order that they meet the RPA requirements of BS5837.

6.2 The data is presented here in tabular format:-

Key: RSAM = Remove for sound arboricultural management reasons RTFD = To be removed to facilitate development UF of. = Under footprint of development TRANS = Transplant to an alternative location on site

Tree No	Species	Cat	S or M	Stem Diam mm	BS5837:2005 Min.Radial Prot. Zone m	BS5837:2005 Min.Root Prot. Area m^2	Distance from Site Features (see key above)	Can Tree Be Retained
1	Holly *Ilex aquifolium*	B1	S	100	1.2	4.5	1.8m to access drive	YES
2	Holly *Ilex aquifolium* [var. edge to leaf]	B1	S	160	1.9	11.6	1m to new access drive	YES (1)
3	Holly *Ilex aquifolium*	B1	M	170	1.7	9.1	1.3m to new access drive	YES (1)
4	Maidenhair Tree *Ginkgo biloba*	A1	S	160	1.9	11.6	1.5m to new access drive	YES (1)
5	Silver Birch *Betula pendula*	A1 / B1	S	est 350	4.2	56.0	1.8m to new access drive	YES (1)
6	Holly *Ilex aquifolium*	B1	S	160	1.9	11.6	0.7m to new access drive	YES (1)
7	Pedunculate Oak *Quercus robur*	A1	S	450	5.4	91.7	1m to new access drive	YES (1)
8	Himalayan Birch *Betula jacquemontii*	A1	S	240	2.9	26.1	4.2m to new access drive 4.6m to new building	YES
9	Tupelo *Nyssa sylvatica*	B1	S	160	1.9	11.6	4.4m to new building	YES

Tree No	Species	Cat	S or M	Stem Diam mm	BS5837:2005 Min.Radial Prot. Zone m	BS5837:2005 Min.Root Prot. Area m^2	Distance from Site Features (see key above)	Can Tree Be Retained
10	Himalayan Birch *Betula jacquemontii*	A1	S	240	2.9	26.1	4.8m to new building	YES
11	Hawthorn *Crateagus monogyna*	C1	M	450	4.5	63.6	9.2m to new building	YES
12	Myrobalan Plum *Prunus cerasifera*	R	S	180	n/a	n/a	n/a	NO – RSAM
13	Flowering Cherry *Prunus avium*	B1	M	170	1.7	9.1	15.2m to new building	YES
14	Hawthorn *Crateagus monogyna*	B1	S	160	1.9	11.6	13.3m to new building	YES
15	Bay Laurel *Laurus nobilis*	C1	M	360	3.6	40.7	12.8m to new building	YES
16	Horse Chestnut *Acer hippocastanum*	C1	S	200	2.4	18.1	15m to new building	YES
17	Pedunculate Oak *Quercus robur*	A1 / B1	S	650	7.8	191.2	12.3m to new building	YES
18	Hawthorn *Crateagus monogyna*	C1	S	150	1.8	10.2	15.2m to new building	YES
19	Pedunculate Oak *Quercus robur*	A1 / B1	S	550	6.6	136.9	12.3m to new building	YES
20	Silver Birch *Betula pendula*	C1	S	380	4.6	65.3	19m to new building	YES
21	Judas Tree Cercis siliquastrum	B1	M	200	2.0	12.6	16.4m to new building	YES
22	Pedunculate Oak *Quercus robur*	B1	S	600	7.2	162.9	7.2m to new building	YES

6.3 NO – RSAM

- There is **1** tree within this category on this project that should be removed for sound arboricultural management reasons regardless of any redevelopment proposals and as such does not form part of the planning consideration :-

  Tree 12 – Myrobalan Plum – a very poor quality tree with significant dieback that is in a state of terminal decline (off site so will be retained).

6.4 NO – RTFD

- There is **0** trees and **0** groups in this category on this project:-

6.5 YES

- There are **15** trees which can be retained and fully protected in accordance with BS5837 recommendations (see Tree Protection Plan BH.03) :-

  Trees 1 – Holly; 8-Himalayan Birch; 9-Tupelo; 10- Himalayan Birch; 11-Hawthorn; 13-Cherry; 14-Hawthorn; 15-Bay Laurel; 16-Horse Chestnut; 17-Pedunculate Oak; 18-Hawthorn; 19-Pedunculate Oak; 20-Silver Birch; 21-Judas Tree; 22-Pedunculate Oak.

6.6 YES (1)

- There are **6** trees which can be retained subject to special construction techniques being employed :-

  Tree 2 – Holly – this tree will need to be pruned to shorten it back from the new access drive and the drive itself overlaps the RPZ so will have to be hand digging works only to install a pegged board edging; geotextile membrane and washed gravel infill.

  Tree 3 – Holly - this tree will need to be pruned to shorten it back from the new access drive and the drive itself overlaps the RPZ so will have to be hand digging works only to install a pegged board edging; geotextile membrane and washed gravel infill.

  Tree 4 – Maidenhair Tree - this tree will need to be pruned to shorten it back from the new access drive and the drive itself overlaps the RPZ so will have to be hand digging works only to install a pegged board edging; geotextile membrane and washed gravel infill.

  Tree 5 – Silver Birch – there is a good ground clearance on this tree so no pruning will be required but the drive overlaps the RPZ so will have to be hand digging works only to install a pegged board edging; geotextile membrane and washed gravel infill.

  Tree 6 – Holly - this tree will need to be pruned to shorten it back from the new access drive and the drive itself overlaps the RPZ so will have to be hand digging works only to install a pegged board edging; geotextile membrane and washed gravel infill.

Tree 7 – Pedunculate Oak – this tree has been crown lifted and there is now a good ground clearance on this tree so no further pruning will be required but the drive overlaps the RPZ so will have to be hand digging works only to install a pegged board edging; geotextile membrane and washed gravel infill.

7.0 PRE-DEVELOPMENT TREE WORK and WORKING WITHIN THE RPA (Generic Precautions)

7.1 Undertake all tree removal work as listed in the Tree Works Schedule – **see appendix BH4.**

7.2 The tree surgery specialist contractors are to be given clear guidelines and a remit that prohibits heavy plant (Lorries, Cranes and Work Platforms) tracking through the site within tree protection zones where there is no existing hard surfacing protection.

7.3 Where trees are to be felled in proximity to others that are to be retained it will be necessary to use special dismantling techniques to avoid both above and below ground damage, lowering sections to the ground in a careful manner with the aid of slinging ropes.

7.4 Unless otherwise specifically instructed - all cut wood and arisings are to be removed from site and safely disposed of.

7.5 Tree stumps within RPA's are to be ground out or retained in situ and **NOT grubbed out** to avoid damage to the root systems of retained trees.

8.0 CONSTRUCTION EXCLUSION ZONE : BARRIERS and GROUND PROTECTION

8.1 Protective fencing barriers are to be 'fit for purpose' and located exactly as specified on the **Tree Protection Plans BH03** and in full accordance with the recommendations contained within British Standard 5837:2005.

9.0 AVOIDING DAMAGE TO STRUCTURES BY TREES : DIRECT or INDIRECT ACTION

9.1 Buildings should be constructed to allow for future growth of existing; planted or self sown trees.

9.2 Direct damage can be caused by :-

a) the disruption of underground services and pipelines

b) displacement of underground services and pipelines

c) the impact of branches with the superstructure

d) structural failure of the tree

- **No** change in ground levels
- **No** construction of a hard surface

- An arboricultural expert is to visit site prior to commencement of any demolition works to verify that the fencing is of the desired quality and that it is in the correct place and **'Fit For Purpose'.**

10.2 **Phase 2 – Construction Phase Works**

- Ground protection measures must also be applied where shown on plan **Tree Protection Plan BH03** in accordance with BS5837:2005 – Section 9.3 and Figure 3.
- It will be very important for any vehicle drivers to have undergone a pre-contract induction session where the trees to be retained are to be highlighted and the need for care and attention when working nearby with swinging booms or slewing hydraulic arms to avoid contact with trunks or crowns.
- An arboricultural expert is to visit site prior to commencement of any construction works to verify that the protective fencing and ground protection measures are of the desired quality and they are in the correct place and **'Fit For Purpose'.**

10.3 **Phase 3 – Post Construction Phase Works**

- On completion of the main construction phase of works on site the protective fencing may be dismantled.
- However, in the case of trees 2 to 7 HERAS panels in concrete bases firmly clamped and wired together must be erected along the back edge of the new access drive which is within their RPZ.
- The pegged board edging and gravel infill can then be applied to complete the project.
- This work must be hand digging only and no machinery may traverse across the RPZ of any of the trees.

10.4 **UTILITY SERVICE CONNECTIONS**

- I have been assured that all new utility and communications service connections can be inserted outside of Root Protection Zones and thus pose no risk to retained trees.

11.0 SOFT LANDSCAPING WORKS

- Any soft landscape works within the protected areas shall be in accord with Table 3 and Sections 13 & 14 of BS5837:2005**.** It is strongly recommended that the plans and specifications for the landscaping of this development are drawn up by a qualified Landscape Architect.

In this respect the Tree Survey exercise will have identified any trees within categories c) or d) and tree works advised accordingly to remedy risk.

Items a) and b) can be avoided by judicious design and careful placement of utility services and by adherence to Table 3 planting distances.

9.3 Indirect damage by root action causing the shrinkage or swelling of clay soils can be avoided by adherence to the new tree planting distances specified under Table 3 – see at **appendix BH6;** and by having engineer designed foundations to accord with NHBC Standards.

10.0 DEMOLITION & CONSTRUCTION IN PROXIMITY TO EXISTING TREES

This project involves both a demolition and construction works element.

10.1 **Phase 1 – Pre-Demolition Phase Works**

- Prior to undertaking any works on this site the tree pruning works prescribed at **appendix BH4** and shown on **Tree Protection Plan BH03 – see at appendix BH5** must be undertaken.
- Erect the full specification protective fencing to enclose and protect trees around the periphery of the site. The protective fencing barriers are to be located exactly as specified on the **Tree Protection Plan BH03 – see at appendix BH5.** Which is in full accordance with the recommendations contained within British Standard 5837:2005 – Section 9.2 and Figure 2
- A copy of the Tree Protection Plan is to be pinned up in the temporary offices/mess hut on site for all site staff to see. The area within the fenced off exclusion zone is to be regarded as **sacrosanct** and the fencing shall not be taken down or relocated at any time without the prior written approval of the monitoring arboriculturist or local authority tree officer, unless this has already been agreed as part of the planning application consent process and is detailed in writing and shown on a plan.

  The following prohibitions shall apply within the area enclosed by the Tree Protection Fencing :-

  - **No** mechanical digging or scraping once the initial ground cover vegetation has been cleared and the site fenced off.
  - **No** storage of plant, equipment or materials
  - **No** vehicular or plant access
  - **No** fire lighting
  - **No** handling, discharge or spillage of any chemical substance, including cement washings
  - **No** action likely to cause localised water-logging

- **No** change in ground levels
- **No** construction of a hard surface

- An arboricultural expert is to visit site prior to commencement of any demolition works to verify that the fencing is of the desired quality and that it is in the correct place and **'Fit For Purpose'.**

10.2 **Phase 2 – Construction Phase Works**

- Ground protection measures must also be applied where shown on plan **Tree Protection Plan BH03** in accordance with BS5837:2005 – Section 9.3 and Figure 3.
- It will be very important for any vehicle drivers to have undergone a pre-contract induction session where the trees to be retained are to be highlighted and the need for care and attention when working nearby with swinging booms or slewing hydraulic arms to avoid contact with trunks or crowns.
- An arboricultural expert is to visit site prior to commencement of any construction works to verify that the protective fencing and ground protection measures are of the desired quality and they are in the correct place and **'Fit For Purpose'.**

10.3 **Phase 3 – Post Construction Phase Works**

- On completion of the main construction phase of works on site the protective fencing may be dismantled.
- However, in the case of trees 2 to 7 HERAS panels in concrete bases firmly clamped and wired together must be erected along the back edge of the new access drive which is within their RPZ.
- The pegged board edging and gravel infill can then be applied to complete the project.
- This work must be hand digging only and no machinery may traverse across the RPZ of any of the trees.

10.4 **UTILITY SERVICE CONNECTIONS**

- I have been assured that all new utility and communications service connections can be inserted outside of Root Protection Zones and thus pose no risk to retained trees.

11.0 SOFT LANDSCAPING WORKS

- Any soft landscape works within the protected areas shall be in accord with Table 3 and Sections 13 & 14 of BS5837:2005**.** It is strongly recommended that the plans and specifications for the landscaping of this development are drawn up by a qualified Landscape Architect.

- On completion of all building works and immediately prior to landscaping works being undertaken and with the agreement of the LPA Tree Officer the Protective Fencing may be removed and the area within opened up for soft landscaping and final surface treatments.
- At this juncture appropriate de-compaction, aeration and mulching should be undertaken on any areas designated for planting, which for practical operational reasons could not be fully protected during the build process.
- This is to be hand excavation works only with no machinery being used unless specific ground protection has been laid. Even then only lightweight mini excavators are to be permitted access.

12.0 MONITORING & SITE SUPERVISION

- It is recommended in BS5837:2005 that either an arboriculturist or a person suitably experienced in the subject is retained to advise on all tree related aspects of site monitoring and supervision and it is the local authority's responsibility to make this a condition of planning approval with the said Condition ideally requiring a set schedule of operations and timings prior to undertaking works on site.
- In this instance I recommend at least two pre-start meetings – one prior to the Demolition Phase and then another prior to the Construction Phase should be held out on site with the Contracts Manager to inspect the protective fencing and ground protection measures to verify that they are fit for purpose and in the correct location according to the Tree Protection Plans.
- Further meetings should be at monthly intervals for the duration of the works on site or as required by the Client to address any issues which may arise.

13.0 CONCLUSIONS

- There is no tree loss on this project and all retained trees can be fully protected.
- Some facilitation pruning works are recommended for trees 2 to 4 which will alleviate nuisance and avoid conflict without damaging the amenity value of the trees or adversely impacting on their health and vitality.
- Adequate levels of tree planting can be incorporated into the scheme to enhance the area for the future fitting in with the revised use of the site.
- This is therefore in my opinion a scheme which is fully supportable in arboricultural terms.

Bernie Harverson
arboricultural consultant

BH 1

Tree Survey Schedule

(in accordance with Table 1 of BS5837)
with Flow Diagram &Tree Survey Notes

Bernie Harverson
arboricultural consultant

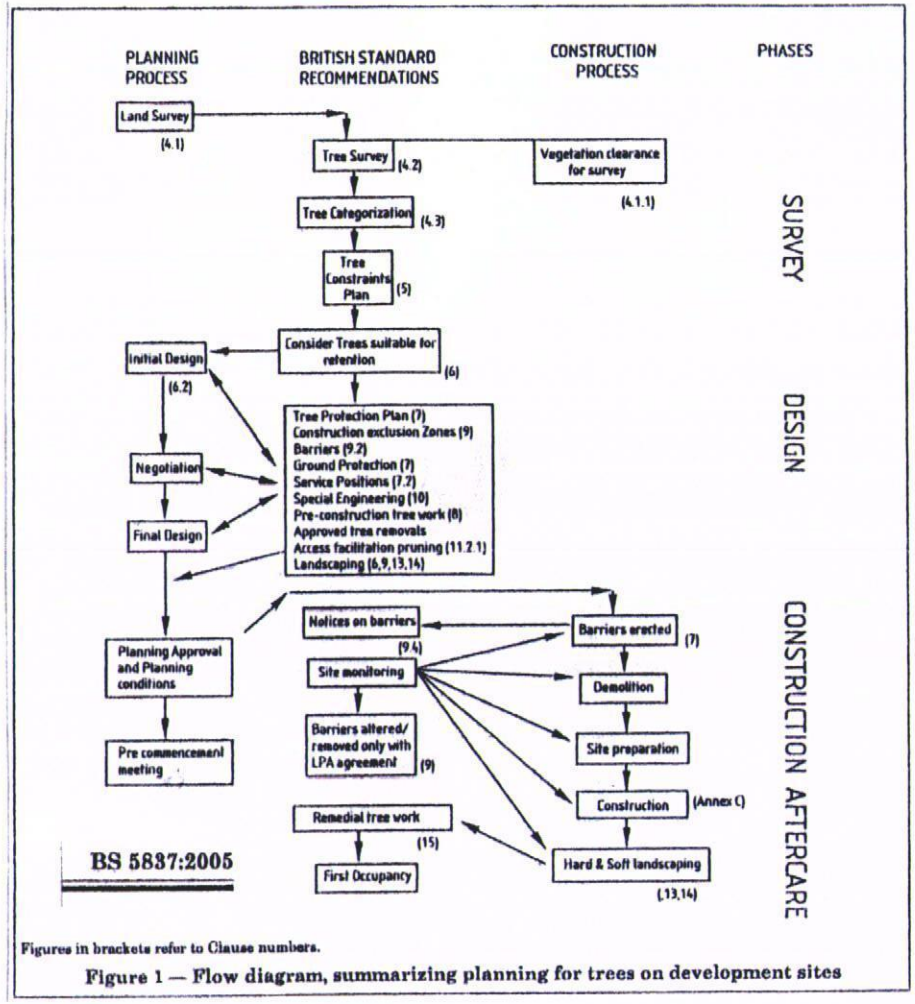

Figures in brackets refer to Clause numbers.

Figure 1 — Flow diagram, summarizing planning for trees on development sites

BJH.0541

These **TREE SURVEY NOTES** have been prepared in accordance with the recommendations of **British Standard 5837:2005** and define the criteria for pre – development tree surveys.

- Each tree/group has been allocated a unique number (**No.**). Where specifically commissioned small durable numbered metal tags can be applied to each tree/group surveyed.
- The tree species (**Species**) is provided in both English and Latin formats.
- Height assessments (**Ht**) are estimated in metres. This will be adequate for the majority of cases, but where accurate heights become a critical issue it may be necessary to return to site, as a separately commissioned exercise, to collect accurate measurements with the aid of optical instruments.
- Trunk/stem diameters (**Trunk Diam**)are measured in millimetres at 1.5m above ground level and denoted as **S** single stemmed trees or **M** for multi-stemmed trees which are measured immediately above the root flare.
- Radial crown spread assessments (**Brch Sprd**) are estimated in metres from the centre of the trunk/group to each of the four primary points of the compass (**N**-north; **E**-east; **S**-south and **W**-west) in order to achieve a representation of the crown shape which will be recorded on the accompanying tree survey plan. These provide a general guide as to the main bulk outline of a tree/groups crown but are not tape measured dimensions. These would only be undertaken as part of a separately commissioned exercise, where precise dimensions are critical to the project at hand.
- The average ground clearance (**Grd Cl**) is estimated and shown in metres.
- An assessment of a tree/groups age (**Age**) class is made in terms of its site specific maturity as part of the surrounding landscape, taking into account its overall shape and form in that setting, and is recorded thus :-

Y	-	Young tree/group
MA	-	Middle – aged tree/group
M	-	Mature tree/group
OM	-	Over – mature tree/group
V	-	Veteran tree/group

- An assessment of a tree/groups overall physiological condition (**Fm**)is recorded as :-

G	-	Good
F	-	Fair
P	-	Poor
D	-	Dead

- Data on the structural condition (**Condition Comments**) of the tree/group is provided to give an indication of its visual appearance and any significant health and safety issues.
- Details of necessary tree works required at the time of survey is given under the heading – **Preliminary Management Recommendations**
- An estimate of a tree/groups future life expectancy (**Rem Cont**) is made and is recorded thus :-
  1-10; 10-20; 20-30; 30-40 or **>40** years.
- The category grading (**Cat**) for each tree/group is assessed according to the criteria provided within **BS5837:2005.** The assessment is made of the tree/group in its current condition and within the environment encountered bearing in mind its suitability for retention as part of any future proposed development; although the exact layout detail of any specific scheme will not be known at the time of surveying. The trees have been classified into one of four categories and colour coded as BS5837 recommends - **R** (dark red); **G** (light green); **B** (mid-blue) and **C** (grey).Please note that the numerical sub-categories which are also applied are for guidance only and do not carry any cumulative or increased value for the tree/group. This colour coding scheme will be applied to all drawings provided.

Table 1 – Cascade chart for tree quality assessment

TREES FOR REMOVAL				
Category and definition	**Criteria**			**Colour on plan**
Category R Those in such a condition that any existing value would be lost within 10 years and which should, in current context, be removed for reasons of sound arboricultural management.	• Trees that have a serious, irremediable, structural defect, such that their early loss is expected due to collapse, including those that will become unviable after removal of other **R** category trees (i.e. where, for whatever reason the loss of companion shelter cannot be mitigated by pruning) • Trees that are dead or are showing signs of significant, immediate, and irreversible overall decline • Trees infected with pathogens of significance to the health and/or safety of other trees nearby (e.g. Dutch Elm Disease), or very low quality trees suppressing adjacent trees of better quality			Dark Red
TREES TO BE CONSIDERED FOR RETENTION				
	Criteria – Subcategories			
	1	**2**	**3**	
Category A – Those of high quality and value: in such a condition as to be able to make a substantial contribution (a minimum of 40 years is suggested)	Trees that are particularly good examples of their species, especially if rare or unusual, or essential components of groups, or of formal or semi-formal arboricultural features (e.g. the dominant and/or principal trees within an avenue)	Trees, groups or woodlands which provide a definite screening or softening effect to the locality in relation to views into or out of the site, or those of particularly visual importance (e.g. avenues or other arboricultural features assessed as groups)	Trees, groups or woodlands of significant conservation, historical, commemorative or other value (e.g. veteran trees or wood-pasture)	Light Green
Category B – Those of moderate quality and value: in such a condition as to make a significant contribution (a minimum of 20 years is suggested)	Trees that might be included in the high category, but are downgraded because of impaired condition(e.g. presence of remediable defects including unsympathetic past management and minor storm damage)	Trees present in numbers, usually as groups or woodlands, such that they form distinct landscape features, thereby attracting a higher collective rating 3than they might as individuals but which are not, individually, essential components of formal or semi-formal arboricultural features (e.g. trees of moderate quality within an avenue that includes better, A category specimens), or trees situated mainly internally to the site, therefore individually having little visual impact on the wider locality	Trees with clearly identifiable conservation or other cultural benefits	Mid Blue
Category C – Those of low quality and value: currently in adequate condition to remain until new planting could be established (a minimum of 10 years is suggested), or young trees with a stem diameter below 150mm	Trees not qualifying in higher categories	Trees present in groups or woodlands, but without this conferring on them significantly greater landscape value, and/or trees offering low or only temporary screening benefit	Trees with very limited conservation or other cultural benefits	Grey
Note: Whilst C category trees will usually not be retained where they would impose a significant constraint on development, young trees with a stem diameter of less than 150mm should be considered for relocation				

Bernie Harverson arboricultural consultant

BJH.0541

TREE SURVEY SCHEDULE

Client : Mrs A Allaway **Site Location :** 38 Bushy Mead, Widley

Surveyor : Bernie Harverson *M.Arb.* **Date Surveyed :** 9th November 2011

No	Species	Ht m	S or M	Trunk Diam mm	Brch Sprd m	Grd Cl m	Age	F	Condition Comments	Preliminary Management Recommendations	Rem Cont yrs	Cat
1	Holly *Ilex aquifolium*	5	S	100	N1 E1 S1 W1	2	Y	F	Off site tree-lower crown crowded out by shrubbery	No work considered essential at time of survey	30-40	B1
2	Holly *Ilex aquifolium* [var. edge to leaf]	4	S	160	N1 E1.5 S1.5 W0.5	0	Y	F	Multi stemmed at ground level-crown shape dictated by group pressure-merged crowns-low branching habit	No work considered essential at time of survey	30-40	B1
3	Holly *Ilex aquifolium*	6	M	170	N1 E0.5 S2 W1.5	0	Y	F	Multi stemmed at 1.5m above ground level-crown shape dictated by group pressure-merged crowns-low branching habit	No work considered essential at time of survey	30-40	B1
4	Maidenhair Tree *Ginkgo biloba*	10	S	160	N1.5 E0.5 S1.5 W1.5	1.5	Y	G	Crown shape dictated by group pressure-good shape and form-outwardly sound and healthy	No work considered essential at time of survey	>40	A1
5	Silver Birch *Betula pendula*	15	S	est 350	N5 E7 S5 W2.5	3	M	F	Off site tree-suppressed to west side-crown shape dictated by group pressure-fair shape and form-outwardly sound and healthy	No work considered essential at time of survey	>40	A1 / B1
6	Holly *Ilex aquifolium*	7	S	160	N0.5 E1.5 S1.5 W1	1	Y	F	Suppressed-crown shape dictated by group pressure-low branching habit-fair shape and form-outwardly sound and healthy	No work considered essential at time of survey	30-40	B1
7	Pedunculate Oak *Quercus robur*	15	S	450	N6 E3.5 S4 W6	4	MA	G	Ivy smothering base, trunk and throughout crown-small diameter deadwood-recently crown lifted on south side-good shape and form-outwardly sound an d healthy	Sever ivy	>40	A1
8	Himalayan Birch *Betula jacquemontii*	12	S	240	N4 E3 S2.5 W3	3	Y	G	Good shape and form-outwardly sound and healthy	No work considered essential at time of survey	>40	A1
9	Tupelo *Nyssa sylvatica*	9	S	160	N1 E3 S2 W2	4	Y	F	Ivy smothering base and trunk-crown shape dictated by group pressure-high crown lifted-flattened crown due to dominance of Birch trees	No work considered essential at time of survey	30-40	B1

10	Himalayan Birch *Betula jacquemontii*	12	S	240	N3 E3 S3 W3	3	Y	G	Good shape and form-outwardly sound and healthy	No work considered essential at time of survey	>40	A1
11	Hawthorn *Crateagus monogyna*	9	M	450	N3 E3 S3 W3	1	M	P	Off site tree-ivy smothering base, trunk and through crown-poor quality tree dominated by ivy	Advise sever ivy	10-20	C1
12	Myrobalan Plum *Prunus cerasifera*	6	S	180	N2 E2 S2 W2	3	MA	P	Off site tree-storm damaged-split trunk at 1.8m-poor quality tree covered in a climber	Advise remove	5-10	**R**
13	Flowering Cherry *Prunus avium*	5	M	170	N1 E1 S1 W1	1	Y	F	Multi stemmed at ground level	No work considered essential at time of survey	>40	B1
14	Hawthorn *Crateagus monogyna*	5	S	160	N3 E2 S3 W2	1.5	Y	F	Ivy smothering base, trunk and through crown	Sever ivy	30-40	B1
15	Bay Laurel *Laurus nobilis*	4.5	M	360	N2.5 E2 S1.5 W2	0	Y	F	Multi stemmed at ground level-low branching habit	No work considered essential at time of survey	20-30	C1
16	Horse Chestnut *Acer hippocastanum*	7	S	200	N2 E0.5 S2 W4	1	Y	P	Ivy smothering base and trunk-suppressed and dominated by Oak-crown weighted west-crown shape dictated by group pressure-previously heavily topped-poor quality tree	Sever ivy	10-20	C1
17	Pedunculate Oak *Quercus robur*	18	S	650	N8 E3.5 S8 W5	4	M	G	Multi stemmed at 4m above ground level-epicormics-small diameter deadwood	No work considered essential at time of survey	>40	A1 / B1
18	Hawthorn *Crateagus monogyna*	5	S	150	N0.5 E1.5 S2 W1	1.5	Y	P	Ivy smothering base, trunk and through crown-suppressed by Oak	Sever ivy	30-40	C1
19	Pedunculate Oak *Quercus robur*	18	S	550	N7 E8 S9 W3	4	M	G	Small diameter deadwood-flat crowned on west side otherwise good shape and form-outwardly sound and healthy	No work considered essential at time of survey	>40	A1 / B1

20	Silver Birch *Betula pendula*	12	S	380	N4 E6 S5 W1.5	3	MA	P	Epicormics-suppressed by Oak-small diameter deadwood-poor quality tree	No work considered essential at time of survey	10-20	C1
21	Judas Tree Cercis siliquastrum	4.5	M	200	N4 E2 S4 W2	0	MA	F	Multi stemmed at ground level-open splayed habit-suppressed by Oak-low branching habit	No work considered essential at time of survey	30-40	B1
22	Pedunculate Oak *Quercus robur*	18	S	600	N6 E8 S7 W2	2	M	F	Off site tree-small diameter deadwood-low branching habit-branches touching garage roof and causing damage-recently pruned and crown lifted on west side	No work considered essential at time of survey	>40	B1

Bernie Harverson
arboricultural consultant

BH 2

Tree Root Protection Area Schedule

(in accordance with Table 2 of BS5837)

Bernie Harverson
arboricultural consultant

BJH.0541

ROOT PROTECTION ZONE/AREA SCHEDULE

Client : Mrs A Allaway **Site Location :** 38 Bushy Mead, Widley

Tree No.	Tree Species	Grade	Single or Multi	Diam. mm	BS5837:2005 Table2-Radial Protect. Zone m	BS5837:2005 Table2-Root Protect. Area m^2	Is An Offset Required To Cater For Existing Rooting Pattern Restrictions
1	Holly *Ilex aquifolium*	B1	S	100	1.2	4.5	NO – free rooting to all directions
2	Holly *Ilex aquifolium* [var. edge to leaf]	B1	S	160	1.9	11.6	NO – free rooting to all directions
3	Holly *Ilex aquifolium*	B1	M	170	1.7	9.1	NO – free rooting to all directions
4	Maidenhair Tree *Ginkgo biloba*	A1	S	160	1.9	11.6	NO – free rooting to all directions
5	Silver Birch *Betula pendula*	A1 / B1	S	est 350	4.2	56.0	NO – free rooting to all directions
6	Holly *Ilex aquifolium*	B1	S	160	1.9	11.6	NO – free rooting to all directions
7	Pedunculate Oak *Quercus robur*	A1	S	450	5.4	91.7	NO – free rooting to all directions
8	Himalayan Birch *Betula jacquemontii*	A1	S	240	2.9	26.1	NO – free rooting to all directions
9	Tupelo *Nyssa sylvatica*	B1	S	160	1.9	11.6	NO – free rooting to all directions
10	Himalayan Birch *Betula jacquemontii*	A1	S	240	2.9	26.1	NO – free rooting to all directions
11	Hawthorn *Crateagus monogyna*	C1	M	450	4.5	63.6	NO – free rooting to all directions
12	Myrobalan Plum *Prunus cerasifera*	**R**	S	180	n/a	n/a	NO – this tree would be removed for sound arboricultural management reasons regardless of any redevelopment proposals

13	Flowering Cherry *Prunus avium*	B1	M	170	1.7	9.1	NO – free rooting to all directions
14	Hawthorn *Crateagus monogyna*	B1	S	160	1.9	11.6	NO – free rooting to all directions
15	Bay Laurel *Laurus nobilis*	C1	M	360	3.6	40.7	NO – free rooting to all directions
16	Horse Chestnut *Acer hippocastanum*	C1	S	200	2.4	18.1	NO – free rooting to all directions
17	Pedunculate Oak *Quercus robur*	A1 / B1	S	650	7.8	191.2	NO – free rooting to all directions
18	Hawthorn *Crateagus monogyna*	C1	S	150	1.8	10.2	NO – free rooting to all directions
19	Pedunculate Oak *Quercus robur*	A1 / B1	S	550	6.6	136.9	NO – free rooting to all directions
20	Silver Birch *Betula pendula*	C1	S	380	4.6	65.3	NO – free rooting to all directions
21	Judas Tree Cercis siliquastrum	B1	M	200	2.0	12.6	NO – free rooting to all directions
22	Pedunculate Oak *Quercus robur*	B1	S	600	7.2	162.9	NO – the garage footings will deflect rooting but are unlikely to be a significant constraint for an Oak

Bernie Harverson
arboricultural consultant

BH 3

Tree Constraints Plan
BH01/02

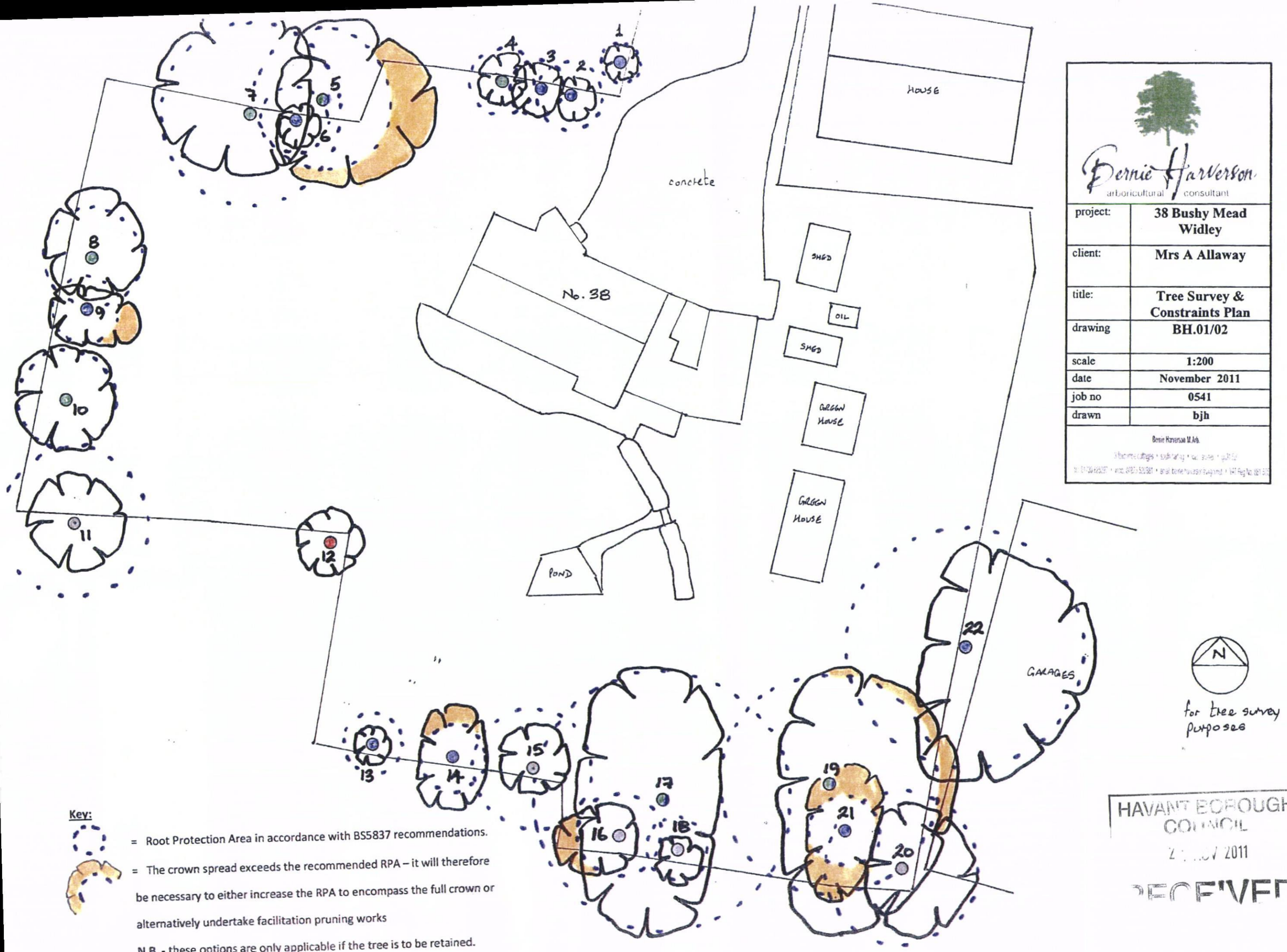

Bernie Harverson
arboricultural consultant

project:	38 Bushy Mead Widley
client:	Mrs A Allaway
title:	Tree Survey & Constraints Plan
drawing	BH.01/02
scale	1:200
date	November 2011
job no	0541
drawn	bjh

Bernie Harverson M.Arb.

Key:

= Root Protection Area in accordance with BS5837 recommendations.

= The crown spread exceeds the recommended RPA – it will therefore be necessary to either increase the RPA to encompass the full crown or alternatively undertake facilitation pruning works

N.B. - these options are only applicable if the tree is to be retained.

HAVANT BOROUGH COUNCIL
2 NOV 2011
RECEIVED

Bernie Harverson
arboricultural consultant

BH 4

Pre-Development Facilitation
Tree Works Schedule

Bernie Harverson
arboricultural consultant

BJH.0541

TREE WORK SPECIFICATION

Client : **Mrs A Allaway** **Site Location :** **38 Bushy Mead, Widley**

Attention is drawn to the fact that some mature trees could provide suitable habitat for bird nesting (ivy and cavities) and bat roosting (ivy, branch cracks and cavities) and this might at certain times of year influence and possibly restrict the form of management which can be applied. Given the legal constraints imposed by the Habitat Regulations and the Wildlife and Countryside Act this may necessitate expert ecological advice being sought before proceeding with the recommendations.

Tree No	Species	Tree Works Recommended
2	Holly	• Trim and shape up the lower canopy to give a tighter form to the tree and at the same time negate overhang of the proposed new access drive
3	Holly	• Trim and shape up the lower canopy to give a tighter form to the tree and at the same time negate overhang of the proposed new access drive
4	Maidenhair Tree	• Trim and shape up the lower canopy to give a tighter form to the tree and at the same time negate overhang of the proposed new access drive
6	Holly	• Trim and shape up the lower canopy to give a tighter form to the tree and at the same time negate overhang of the proposed new access drive

Bernie Harverson
arboricultural consultant

BH 5

Tree Protection Plan
BH 03

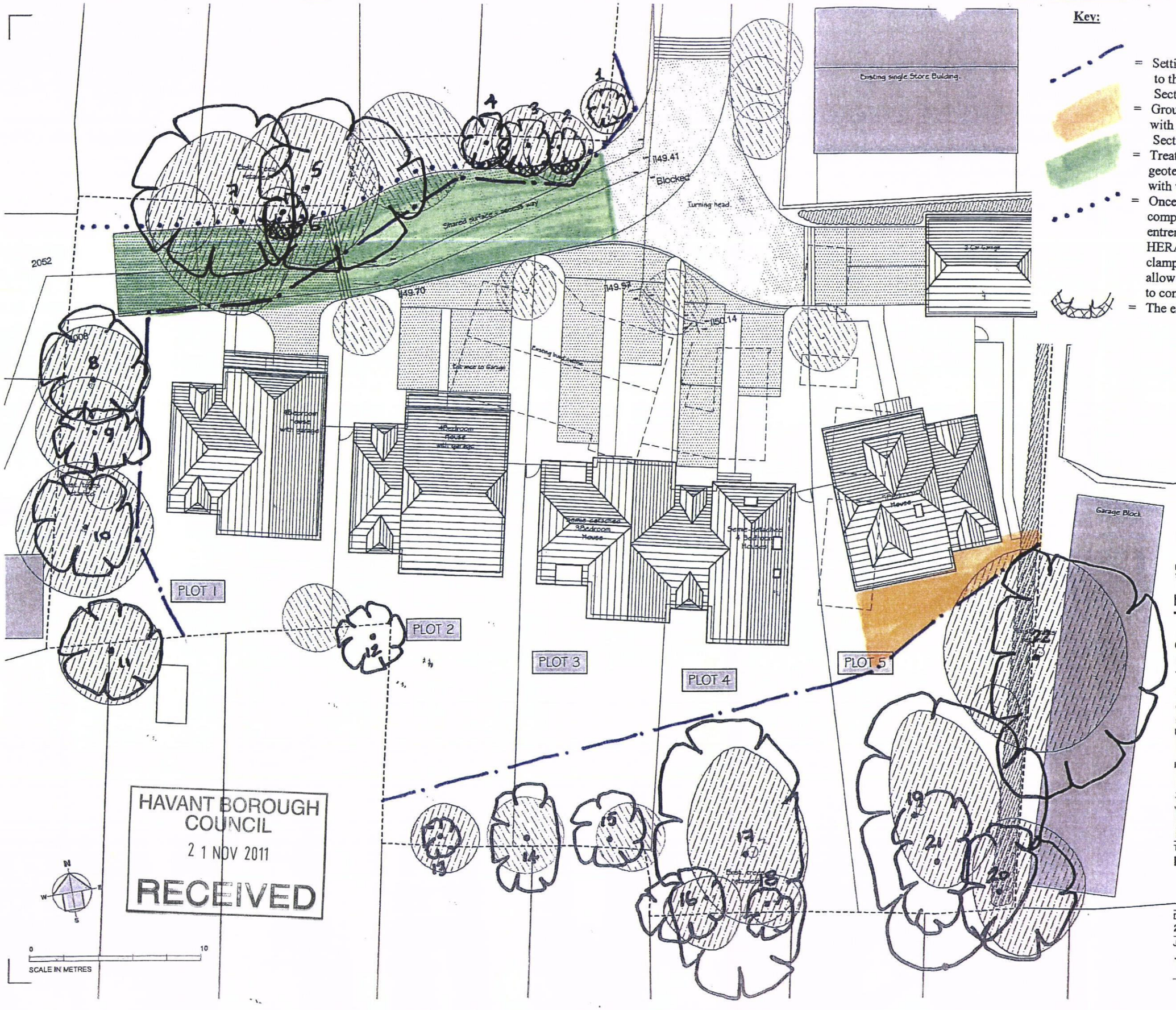

HAVANT BOROUGH COUNCIL
21 NOV 2011
RECEIVED

Key:

= Setting out positions for protective fencing to the full BS5837 standards as per Section 9.2 and Figure 2.

= Ground Protection Measures in accordance with BS5837 standards as per Section 9.3 and Figure 3.

= Treated pegged board edging with porous geotextile laid across the zone and infilled with washed gravel as the wearing course

= Once the main construction phase has been completed the protective fencing can be entrenched back to this alignment and comprise HERAS panels footed in concrete bases firmly clamped and wired together – this will then allow the porous driveway feature to be laid to complete the development

= The extent of recommended tree pruning works

Bernie Harverson
arboricultural consultant

project:	38 Bushy Mead Widley
client:	Mrs A Allaway
title:	Tree Protection Plan
drawing	BH.03
scale	1:200
date	November 2011
job no	0541
drawn	bjh

Bernie Harverson M.Arb.

Title: Proposed Layout

Scale: 1:200 @ A3

Date	Drawn	Checked
24/10/2011	CG	CJB

Job Number	Drawing Number		Revision
10001	SK	101	

1. Standard scaffold poles
2. Uprights to be driven into the ground
3. Panels secured to uprights with wire ties and where necessary standard scaffold clamps
4. Weldmesh wired to the uprights and horizontals
5. Standard clamps
6. Wire twisted and secured on inside face of fencing to avoid easy dismantling
7. Ground level
8. Approximately 0.6m driven into the ground

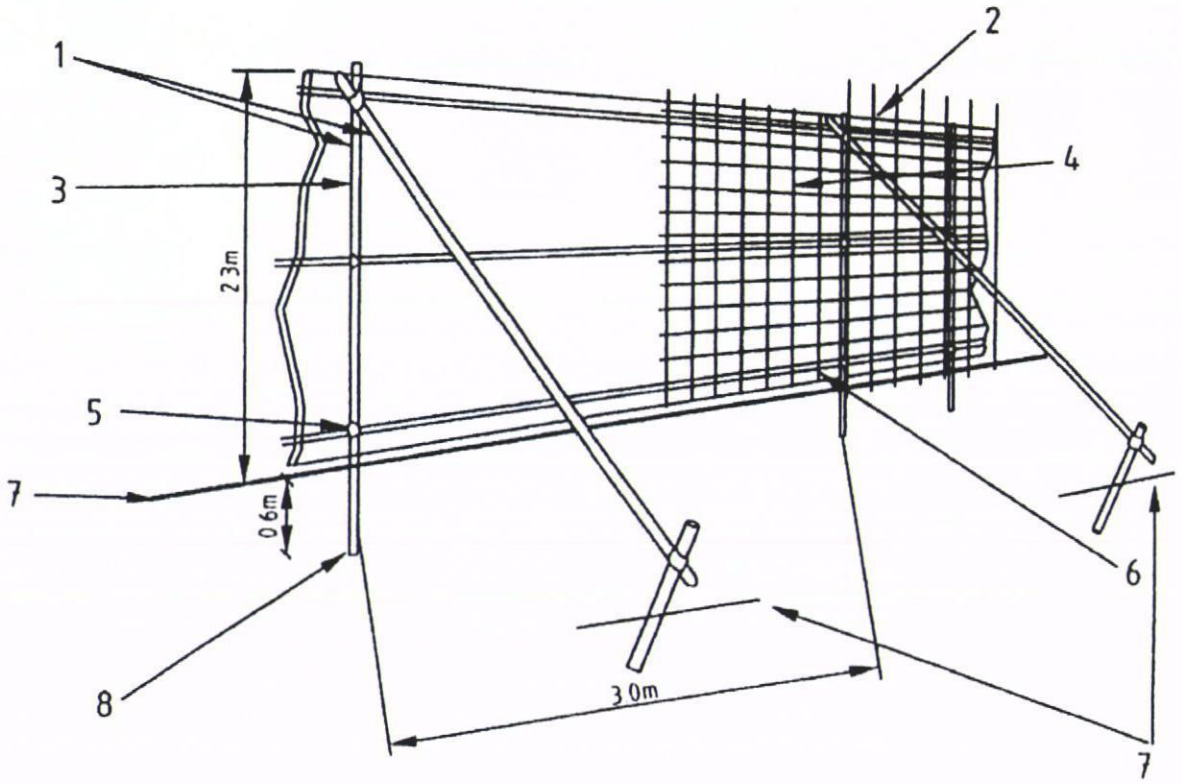

Figure 2 - Protective Barrier
Extract taken from BS5837:2005

9.2 Barriers

9.2.1 Barriers should be fit for the purpose of excluding construction activity and appropriate to the degree and proximity of work taking place around the retained tree(s). On all sites, special attention should be paid to ensuring that barriers remain rigid and complete.

9.2.2 In most cases, barriers should consist of a scaffold framework in accordance with Figure 2. comprising a vertical and horizontal framework, well braced to resist impacts, with vertical tubes spaced at a maximum interval of 3m. Onto this, Weldmesh panels should be securely fixed with wire or scaffold clamps. Weldmesh panels on rubber or concrete feet are not resistant to impact and should not be used.

NOTE The above is preferred because it is readily available, resistant to impact, can be re-used and enables inspection of the protected area.

9.2.3 It may be appropriate on some sites to use temporary site office buildings as components of the tree protection barriers.

TREE PROTECTION AREA

KEEP OUT

- NO EXCAVATION OR TRENCHING WORKS PERMITTED
- NO STORAGE OF PLANT OR MATERIALS PERMITTED
- NO VEHICLE ACCESS PERMITTED
- NO FIRE LIGHTING PERMITTED
- NO CHEMICAL HANDLING
- VEHICLES WORKING CLOSE TO PROTECTIVE FENCING MUST AVOID CONTACT WITH OVERHANG FROM TREE CANOPY

Common causes of Tree Death

BJH.0541

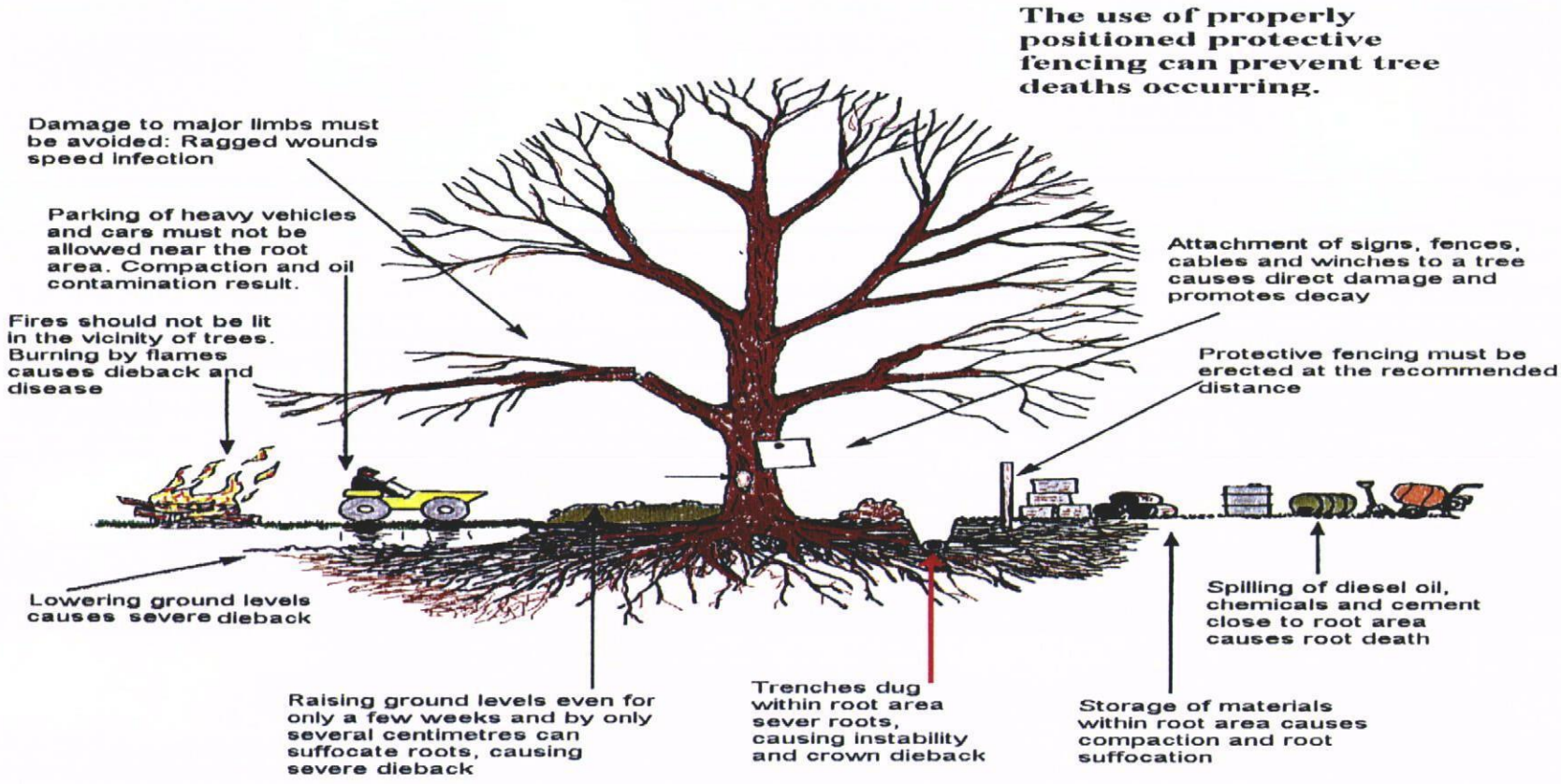

Please use copies of this as an on-site poster for personnel

Bernie Harverson
arboricultural consultant

BH 6

BS 5837:2005 Extracts

Section15 & NJUG 10 Extracts

Extract taken from BS5837:2005 & NJUG 10

15 Post development management

15.1 Existing trees

15.1.1 Trees growing on a site before development takes place may, if adversely affected, be in decline over a period of several years before they die. This varies greatly depending on the age, species and condition of the tree, the soil conditions, climate and the extent of damage incurred during development. A programme of inspections and necessary work for the treatment of symptoms as they develop should be drawn up in conjunction with an arboriculturist. This programme may include recommendations for frequency of inspection and/or beneficial tree work and should take the form of an arboricultural management plan.

15.1.2 Where the trees in question are protected by planning controls, the planning authority should be informed and any necessary agreements obtained prior to such work.

15.1.3 Prior to handover, following completion of development, the arboriculturist should look for signs of intolerance to change in conditions and the effect of the development and any accidental damage to identify the need for further tree works in addition to those originally specified at the beginning of the development process.

15.1.4 An arboriculturist, should consider appropriate cultural operations. These may include irrigation, or measures to enhance the soil structure and organic nitrogen levels in the soil.

15.1.5 Where the development design incorporates the need for active management intervention following the completion of construction works, a tree or landscape management plan should be prepared and a copy supplied to all parties who may have an interest in the future management of the site or parts of it.

15.2 New plantings

Maintenance of newly planted trees is of particular importance during the critical establishment period, of at least two years and may, where required by planning conditions, be five years or more following planting. A detailed maintenance schedule covering the establishment period should be prepared in conjunction with the landscape design proposals and appropriate arrangements made for its implementation.

NJUG 10 - NATIONAL JOINT UTILITIES GROUP

2. HOW ROOTS ARE DAMAGED

2.1 Contrary to popular belief, the root system of a tree is not a mirror image of the branches, nor is there usually a 'tap root'. The majority of the root system of any tree is in the surface 600mm of soil, extending radially in any direction for distances frequently in excess of the tree's height. Excavation or other works within this area are liable to damage roots.

The root system

2.2 The base of the trunk typically flares out in buttresses, with these extending into the main lateral structural roots. These rapidly subdivide into the mass of smaller roots which serve to anchor the tree into the soil, and to conduct water and nutrients. Even a short distance (3m) from a large mature tree, most roots will be less than 10mm in diameter, but these may extend to well beyond the branch spread of the tree. A mass of fine roots, less than 1mm diameter, develop off all parts of this root system. These fine roots absorb the water and nutrients which are essential for the growth of the tree.

2.3 The main structural roots (close to the trunk) develop as the tree grows in response to the need for the tree to have physical stability. Beyond these major roots, root growth is influenced by the availability in the soil of water, air and nutrients. The cultivation of soil provides ideal conditions for root growth. Services are often cooler than surrounding soil, encouraging moisture within the soil to condense on the surface, thereby encouraging roots to grow close to the service. For all these reasons, root growth is often most prolific within the backfilled trench and in the soil around the services. The variability of soil conditions and the presence of obstacles to root growth results in a very variable and unpredictable distribution of the roots within the general guidance in para 2.1.

Types of damage

2.4 Root systems can be damaged by:-

- The severance of a root, for example by trenching, which will destroy all parts of the root beyond that point. Even roots less than 10mm diameter may be serving the fine roots over a wide area. The larger the root severed, the greater the impact on the tree.
- Damage to the bark on the root. The bark protects the root from decay, and is also essential for further root growth. It is loosely attached and easily damaged. If damage to the bark extends around the whole circumference, the root beyond that point will be killed.
- Compaction of the soil. Compaction which is avoidable may occur from storage of material or passage of heavy equipment over the roots. This can restrict or even prevent gaseous diffusion through the soil, and thereby asphyxiate the roots. The roots must have oxygen for survival, growth and effective functioning.
- Alterations in soil level. Lowering the level will strip out the mass of roots near the surface. Raising levels will have the same effect as soil compaction.
- Incorrect application of herbicide.
- Spillage of oils or other harmful materials.

2.5 If roots are damaged:-

1. close to the trunk, the anchorage and stability of the tree can be adversely affected.
2. anywhere along their length, all of the fine roots which they serve will be destroyed.

Damage to the fine roots by severance of a main root, or by compaction or alteration in levels, will prevent these fine roots from absorbing the water and nutrients which are essential for the well-being and growth of the tree. The effects of damage from different causes, for instance by successive excavations for different services, or by excavation in one part and compaction in another part of the system, will be cumulative.

2.6 If the root system is damaged, new roots must develop to sustain the tree. These may develop from damaged root or by increased growth of other parts of the system. It may take years to replace all the lost roots. Vigorous young trees are the most likely to be capable of rapid root regeneration, but mature tress find it very difficult to recover from major root damage, if at all. While roots may regenerate, they will not necessarily provide their original anchorage.

2.7 Trees with damage may not show any immediate symptoms. If the root system is capable of rapid regeneration the tree may recover without any noticeable ill-effects, but usually the symptoms will take several years to develop. Such symptoms may range from only minor branch dieback to deterioration and ultimate death of the tree, dependant on the severity of damage and the ability of the roots to regenerate.

2.8 There is frequently a need for operational land (e.g. substations) to be kept clear of weed growth for safety and as a fire precaution. Herbicides provide an efficient method of killing both herbaceous and woody weeds. There are several types of herbicide with different modes of action and persistence. The most attractive chemicals are those that can be applied to the ground, usually as a granule, and which remain active in the soil for long periods. The wide-ranging root system of a tree may extend into the operational land from adjoining properties, and may absorb some types of herbicides which have been applied to the ground. Material absorbed in one part of the root system can kill the whole tree.

2.9 Other materials which can leach into the soil can also damage the root system. For instance, oil spilled into the soil is broken down by soil bacteria which deplete the soil of oxygen and so asphyxiate the roots. Other materials may have a direct toxic effect on roots.

4 HOW TO AVOID DAMAGE TO TREES

4.1 This section gives general guidance on methods of work to minimise damage top trees which should be adopted by utilities. The local authority (or for privately owned trees, the owner or his advisor), should be informed about planned work at an early stage prior to commencement.

4.2 Wherever trees are present, precautions should be taken to minimise damage to the root system. As the shape of the root system is unpredictable, there should be careful control and supervision of any excavation, particularly if this involves digging through the surface 600mm where the majority of roots develop.

4.3 The precautions advocated in this section are applicable to any excavations or other works occurring within a distance from the tree equal to 4 times the circumference of the trunk (circumference measured around the trunk at a height of 1.5m above ground level; distance measured from the centre of trunk to nearest part of any excavation or other work). This area around the trunk is referred to as "the precautionary area" hereafter.

4.4 Although, ideally, services should be diverted or re-aligned outside the precautionary area, it is recognised that this will not always be practicable. Where works are required for the laying or maintenance of any service within the precautionary area, there are various techniques to minimise the damage. The appropriate method of laying will depend on the circumstances, such as:

- scope of the works (one off repair, or part of an extensive operation)
- degree of urgency (for restoration of supplies)
- soil conditions
- amenity value of tree
- cost

Acceptable techniques in order of preference are:-

1. **Trenchless**
2. Broken trench – hand dug
3. Continuous trench – hand dug

Excavation of open trenches by machine is totally unacceptable within the precautionary area.

4.5 Trenchless

4.5.1 Wherever possible trenchless techniques should be used. The pit excavations for starting and receiving the machinery should be located outside the precautionary area.

4.5.2 IN order to avoid damage to roots by the **mole**, it is recommended that the depth of run should be below 600mm. Techniques involving external lubrication of the mole with materials other than water (e.g. oil, bentonite) should be avoided, unless precautions are taken to ensure that there is no contamination of the soil within 600mm of the surface within the precautionary area.

4.6 Broken Trench

4.6.1 This technique combines hand dug trench sections with trenchless techniques. If excavation is unavoidable, it should be limited to practical access and installation around/below the roots. The trench is excavated by hand with precautions taken as for continuous trench below. Open sections of the trench should only belong enough to allow access for linking to the next section. The length of sections will be determined by local conditions, especially soil texture and cohesiveness, as well as the practical needs for access. In all cases the open sections should be kept as short as possible.

4.7 Continuous Trench

4.7.1 The object of the exercise is to use manual excavation so as to retain as many roots as possible, bearing in mind the need for working space, access to the service in question and room to install the new service. Hand digging needs to be undertaken with great care and for this reason is likely to require closer supervision than normal operations and an understanding by all operatives and staff as to exactly what is expected.

4.7.2 After careful removal of the hard surface material, digging should proceed with hand tools. All roots greater than 25mm diameter should be retained and worked around. Where clumps of smaller roots (including fibrous roots) are found these should also be retained. During the excavation great care should be taken to minimise damage to retained roots, including the bark around the roots. Roots with a diameter in excess of 25mm must not be severed without the advice of the owner of the tree or the local authority arboriculturist, who should respond within one working day. If severance is unavoidable, roots must be cut back using a sharp tool (as listed below), leaving the smallest wound. Suggested tools required: fork, breaker bar, secateurs, handsaw (folding, silky or bow saw), post hole shoveller and hand fork and trowel.

4.8 Backfilling

4.8.1 Any reinstatement must comply with the requirements of street works in Great Britain must comply with the requirements of the code of practice approved under the New Roads and Street Works Act 1991 (Specification for the Reinstatement of Openings in Highways). Without prejudice to the requirements of this code as to the specification of materials to be used and the standards of workmanship to be observed, backfilling of any excavation should be carefully carried to avoid direct damage to the retained roots and excessive compaction of the soil around them.

4.8.2 The backfill should, where possible, include the placement of an inert granular material mixed with top soil or sharp sand (not builders sand) around the retained roots. This should allow the soil to be compacted for resurfacing without damage to the roots, and should secure a local aerated zone enabling the root to survive in the longer term.

4.8.3 Backfilling outside the highway limits should be carried out using the excavated soil. This should not be compacted but lightly "tamped" and usually left slightly proud of the surrounding surface to allow natural settlement. Other materials should not be incorporated into the backfill.

4.8.4 Fine roots are vulnerable to desiccation once they are exposed to the air. Larger roots have a bark layer which provides some protection against desiccation and temperature change. The greatest risk to these roots occurs when there are rapid fluctuations in air temperature around them, e.g. winter diurnal temperatures. It is important, therefore, to protect exposed roots where a trench is to be left open overnight when there is a risk of frost. In winter, before leaving the site at the end of the day, the exposed roots should be wrapped with dry sacking. This sacking must be removed before the trench is backfilled.

4.10 Special Considerations when planning service routes

4.10.1 The potential for future conflict with trees cab be reduced at the stage of initial planning approval by the appropriate alignment of services and the provisions for future tree and shrub planting. Appropriate and separate space should be provided for each. Local authorities should liaise with developers.

4.10.2 If planning requirements and site constraints dictate that trees (existing or to be planted) and services share the same area, consideration should be given to increasing the depth of services, if possible to a minimum of 600mm, and to laying the service in ducts which will resist root penetration but allow replacements to be laid without extensive excavation. As this may incur additional costs, allowance must be made for these costs and the responsibility for meeting them at the planning stage.

4.10.3 When laying new services or replacements, to avoid risk of future direct damage, allowance should be made for future root growth.

4.10.4 Services laid in clay or peat should be constructed to tolerate movements associated with swelling or shrinking of the subsoil cause by root activity. Special precautions for differential movement should be incorporated where services join rigid structures founded at a different depth to the service.

Bernie Harverson
arboricultural consultant

BH 7

Qualifications & Experience

Bernie Harverson
arboricultural consultant

QUALIFICATIONS AND EXPERIENCE

- My name is Bernie Harverson and I am a self employed independent arboricultural consultant in private practice. I take instructions primarily in the South of England but also on occasions work nationwide and abroad and have offices at : –
  3 Foxcombe Cottages, South Harting, West Sussex GU31 5PL and also at Cedar Court, 5 College Street, Petersfield GU31 4AE
- I hold the following arboricultural qualification - **Master of Arboriculture** (Royal Forestry Society – 1976)
- I have over **forty** years of practical and managerial experience in the arboricultural industry including periods in both the public and private sectors.
- My Local Government sector experience comprises one year as a tree surgeon with Brighton Parks and nine years spent in Arboricultural Officer posts with both Westminster City Council and Portsmouth City Council
- My past practical experience in the private sector includes two years at Tilhill Forest Nursery and over ten years for various companies as a Climbing Arborist/Tree Surgeon.
- Managerial work in the private sector includes two years as manager of Beechings tree surgery company and twelve years with CBA Trees as an Arboricultural Consultant.
- As an independent self employed Arboricultural Consultant I now provide a comprehensive range of services including :-
  tree surveys, appraisals, assessments and inspections with particular reference to planning and development and tree safety audits with a service offered as a climber to undertake full climbing inspections to better understand the condition of a given tree before prescribing a management strategy.
    - I also undertake litigation work appearing as an Expert Witness in Court Actions and at Planning Appeals, Hearings and Public Local Inquiries.

Bernie Harverson M.Arb.
3 foxcombe cottages • south harting • west sussex • gu31 5pl
tel: 01730 825297 • mob: 07875 520881 • email: bernie.harverson@virgin.net • VAT Reg No. 881 5056 16