REFUSE

Arboricultural Report

TREE SURVEY REPORT FOR

LAND TO THE REAR OF 34 GLADYS AVENUE
COWPLAIN
WATERLOOVILEE
PO8 8HT

HAVANT BOROUGH COUNCIL
17 FEB 2011
RECEIVED

OCTOBER 2010



Johnston Tree Consultancy
16 manor Close, Wickham, hampshire, PO17 5BZ
07814 403146
johnstontreeconsultancy@gmail.com
www.johnstontreecare.co.uk

CONTENTS

Arboricultural Report including Arboricultural Implications Assessment

1.0	Introduction	3
2.0	Site Visit	3
3.0	Site Description	3
4.0	Tree Survey Data	4
5.0	Tree Quality Assessment	7
6.0	Root Protection Areas	7
7.0	Legal Constraints	7
8.0	Arboricultural Implications Assessment	7
9.0	Conclusions	9

Arboricultural Method Statement

1.0	Contact details	10
2.0	Introduction	11
3.0	Phasing of Development	11
4.0	General Arboricultural Considerations	12
5.0	Supervision and Monitoring	13
Authors Credentials		13

Appendix 1	Tree Survey Plan showing Tree Quality Categories
Appendix 2	Extract from BS5837:2005 – Tree Quality Assessment
Appendix 3	Tree Protection Plan
Appendix 4	Extract from BS5837:2005 – Protective Fencing Specification
Appendix 5	Extract from BS5837:2005 – Scaffolding with Associated Ground Protection Specification
Appendix 6	Sample Signage for Protective Fencing

1.0 INTRODUCTION

1.1 This report was instructed by Mrs Peacock in relation to the proposed development of land at the rear of 34 Gladys Avenue, Cowplain. The report details all trees over 75mm at 1.5m above ground level that are relevant to the siting of the proposed development. The position of the trees on the site is illustrated at **Appendix 1** on the site plan.

1.2 The existing tree stock has been identified and graded in line with the current British Standard BS 5837 2005: Trees in Relation to Construction - Recommendations to enable informed decisions to be made regarding tree retention. The report also details methods of construction to be implemented to safeguard the retained trees.

1.3 This report details the constraints placed on the proposed development from the rooting area of the trees below ground and above ground by their size and position.

1.4 This report will therefore inform the planning process for the proposed development to minimise any negative impact on the existing tree stock and ensure that retained trees shall be in harmony with the proposed development enabling their long-term retention.

2.0 SITE VISIT

2.1 The site visit was undertaken on18th October 2010. The trees were surveyed visually, externally and from ground level only. No samples or internal decay detection readings were taken for further analysis. All dimensions have been measured unless stated otherwise. Weather conditions at the time of the survey were calm sunny and dry with no wind.

2.2 No plans were available at the time of the survey.

3.0 SITE DESCRIPTION

3.1 The site is located within the urban village of Cowplain in Hampshire. The immediate area is residential with a significant amount of residential development being undertaken.

3.2 The site is located within a fenced off area of land to the rear of 34 Gladys Avenue. It currently comprised a 'stable block' style building with the whole plot being finished with pea shingle. The site is flat and has a driveway access adjacent to 34 Gladys Avenue. No vegetation is present within the site but there is a mature Oak and a small tree group outside of the site along the boundaries. In addition there is a large dead mature tree in an adjacent garden.

4.0 TREE SURVEY DATA

In accordance with BS 5837:2005 'Trees in Relation to Construction – Recommendations', the characteristics of trees over 75mm stem diameter measured at 1.5m above ground level (or immediately above root flare if multi-stemmed) have been recorded and they have been categorised in accordance with Table 1 of BS5837: 2005. The following tree data tables should be read in conjunction with the annotated site plan shown at **Appendix 1** and the legend on the following the tables.

Table 1 Tree Data Tables

Tree Number & Species	Height (m)	Diameter at Breast Height (mm)	Branch Spread (m)	Level of Crown Clearance Above Ground (m)	Age Class	Estimated Remaining Contribution (Years)	Comments & Management Recommendations	Tree Category & Work Necessary for Proposed Development
T1 Oak *Quercus* sp.	14	790*	N – 8.5* S – 9.0* E – 8.7* W – 7.9*	2.5	M	40 +	Tree on boundary with 36 Gladys Avenue so access to base and lower stem limited. Unable to inspect root plate as shed and 'stable block' base covering area. Evidence of past management, crown raise some old pruning stubs. Dead limb probable storm damage in north sector of canopy. Dead wood typical of species. Good form and vigour. No immediate work required. **Advisory: Crown clean.**	A1 Retain and protect
T2 Oak *Quercus* sp.	-	-	-	-	-	-	DEAD Within garden of 32 Gladys Avenue. No access so unable to determine cause of death. Appears to have died a long time ago. **Advisory: Contact owners and recommend removal on safety grounds.**	R

Tree Number & Species	Height (m)	Diameter at Breast Height (mm)	Branch Spread (m)	Level of Crown Clearance Above Ground (m)	Age Class	Estimated Remaining Contribution (Years)	Comments & Management Recommendations	Tree Category & Work Necessary for Proposed Development
TG1 Common Ash Cypress *Quercus* and *Cupressus* sp.	Ash up to 10 Cypress up to 6	Maximum 220*	NE – SW 9 NW – SE 5	4	SM	20	All trees outside of fence so unable to get access, inspected over the fence. Most belong to neighbour at the rear excluding 1 Ash leaning on fence and 1 Ash sapling. Cypress trees have all been 'topped' poor form and condition. 1 Ash is twin-stemmed union currently appears sound. Other Ash is leaning on the fence, 20° lean. Collectively poor form and visual contribution but provide limited screening. **Advise: Remove Ash leaning on fence and Ash sapling and replacement plant as part of landscaping scheme.**	C Retain and protect

Key to Terms.

- Identification numbers have been used and correspond to the site plan shown at **Appendix 1.**
- Vegetation type has been categorized as one of the following: Tree (T), Hedge (H), Shrub (S), Group (G), Stump (ST)
- Species are listed by common and botanical name where appropriate.
- Where possible, measurements have been made in accordance with the conventions detailed below. Where this was not possible, due to site conditions or the vegetation being in third party ownership, dimensions have been estimated. * Indicates estimated measurement.
- Height has been estimated to the nearest metre.
- Stem diameter has been measured at 1.5m and recorded in millimetres. Where this was not possible the actual height where the diameter was measured is recorded.
- Crown spread has been recorded in metres.
- Age class has been recorded as follows:

Y	Young recently planted or establishing tree that could be transplanted without specialist equipment, i.e. up to 12-14cms-stem girth.
S/M	Semi mature. An established tree but one that has not reached its potential ultimate height and has significant growth potential.
E/M	Early mature. A tree reaching its ultimate potential height, whose growth rate is slowing down but will increase in stem diameter and crown spread, and has a safe life expectancy.
M	Mature. A mature specimen with limited potential for any significant increase in size but with a reasonable safe life expectancy.
O/M	Over mature. A senescent or moribund specimen with a limited safe life expectancy. Possibly also containing significant structural defects with attendant safety and/or duty of care implications.

- Physiological Condition has been recorded as Good, Fair or Poor.
- Recommendations for tree management have been based on current Arboricultural Best Practice as set out by the Arboricultural profession and all relevant publications.

5.0 TREE QUALITY ASSESSMENT

5.1 The trees have been categorized according to BS5837: 2005 as a guide to their condition and value in terms of visual amenity.

5.2 There are two individual trees worthy of survey and one group. The trees are coloured on the plan attached at **Appendix 1** and the colours are explained in the key of the plan.

5.3 The full Tree Quality Assessment Chart, which gives a more detailed explanation of the definition of the subcategories, has been attached at **Appendix 2.**

6.0 ROOT PROTECTION AREAS

6.1 In accordance with BS5837 2005, the root protection area (RPA) of the tree has been calculated and shown in the following table and on the plan attached at **Appendix 3.** This is the minimum area in m^2, which if being retained, must be left undisturbed around each tree to ensure its safe retention during the development process. It is calculated as an area equivalent to a circle with a radius twelve times stem diameter or ten times base diameter for multi-stem trees. Where the tree is in an open grown situation, the RPA can be shown as a circle. In some circumstances, the incorporation of hard surfaces and other construction can take place within the RPA. Where the tree is in an 'open grown' situation, the RPA can also be moved by 20% in any direction if proposed construction work is on one side only. In this instance T1 oak is considered to be open-grown and the RPA will be off-set on one side only.

Table 2 Root Protection Area (RPA radii shown in ¼ metre graduations)

Tree No	RPA in m^2	Recommended radial distances for RPAs (in metres from the centre of the tree to protective fencing)
T1 Oak	282.37	9.50 **(Off-set 7.50)**
TG1 Common Ash and Cypress	19.95	2.50

7.0 LEGAL CONSTRAINTS

7.1 Havant Borough Council has verbally confirmed that none of the trees adjacent to the site are subjects of a Tree Preservation Order. The site does not fall within a Conservation Area.

8.0 ARBORICULTURAL IMPLICATIONS ASSESSMENT

8.1 Description of Proposed Development

It is proposed to build a chalet style bungalow on the site.

8.2 Drawings Used

Thorns – Young Architectural provided a block plan Scale 1: 100 Drawing Number: 3124:10:3. This plan has been used for the Tree Quality Assessment Plan **Appendix 1**and the Tree Protection Plan **Appendix 3**.

8.3 Direct Loss of Trees

It is proposed to remove T2 Oak and two Common Ash trees within TG1 for reasons of sound arboricultural management. These works are not required to allow the proposal to go ahead.

8.4 Position of Trees in Relation to Proposed Development

It is not considered that the proposed development will result in increased pressure to undertake tree works.

8.5 Protective Fencing

Protective fencing in accordance with Section 9 Figure 2 of BS 5837 2005 **Appendix 4** should be erected around the trees to be retained. Where possible, the positions of these fences should be based on a distance equivalent to the radius of each tree's RPA. All site personnel shall be made aware of the importance of root protection areas and shall ensure that they are properly maintained at all times.

No development works shall commence within or adjacent to the tree protection zone until written confirmation has been obtained from the Local Planning Authority. The named Arboriculturalist or LPA Tree Officer shall supervise all work within the RPAs.

8.6 Changes in Ground Surface within RPAs

There is no change of ground surface proposed within the RPAs of the retained trees.

8.7 Changes in Ground Level within the RPA

There is no change of ground level proposed within the RPAs of the retained trees.

8.8 Services

No overhead services are proposed.

It is proposed that all underground services will be routed down the driveway into the site and will not fall within the RPAs of any of the retained trees. If this is unachievable all services will be planned and installed in line with NJUG4.

8.9 Scaffolding within the RPA's

The scaffolding to be installed within the RPA of T1 Oak should be designed in line with Figures 3 of BS 5837 2005. The design is to incorporate ground protection. **Appendix 5.**

The scaffolding should be erected under the supervision of the named Arboriculturalist or LPA Tree Officer once agreement has been reached with the Local Planning Authority.

8.10 Foundations within the RPA

8.10.1 The proposed footprint falls within the RPA of T1 Oak.

8.10.2 Foundation design may require the utilisation of special engineering which is structure design where the physiological requirements of the tree are paramount.

8.10.3 A site-specific solution may require specialist advice from an engineer regarding the foundation design, following an informed root investigation and consultation with the Arboriculturalist.

9.0 CONCLUSIONS

9.1 The trees adjacent to the site collectively provide a screening role. The quality of T1 is high with individual trees within TG1being low, making little contribution other than a small amount of screening.

9.2 Scaffolding will be erected within the RPA of tree T1 Oak

9.3 The RPA of T1 will be encroached upon during the proposed development and so special care must be taken on site to respect the tree stock during construction operations.

9.4 Supervision of all work within RPAs will be paramount in the successful retention of trees on or adjacent to the site.

9.5 Given these conclusions the following section 'Arboricultural Method Statement' details the recommendations/methodology for the construction of the proposed works in terms of the effect on trees on the site.

Details within this AIA are considered correct at the time of writing but modifications may need to be made as more information becomes available.

ARBORICULTURAL METHOD STATEMENT

1.0 CONTACT DETAILS

Developer	Unknown at present	
Architect	Chris Curnow	Thorns – Young Architectural 232 London road, North end, Portsmouth, PO2 9JQ 02392 672883 c.curnow@thornsyoung.co.uk
Arboricultural Consultant	Sarah Johnston	Johnston Tree Consultancy 16 Manor Close, Wickham, Hampshire, PO17 5BZ 07814 403146 johntontreeconsultancy@gmail.com
Local Authority Case Officer	Unknown at present	Havant Borough Council, Civic Offices, Civic Centre Road, Havant, Hampshire, PO9 2AX 023 9244 6525 planning.development@havant.gov.uk
Local Authority Arboriculturalist	Unknown at present	Havant Borough Council, Civic Offices, Civic Centre Road, Havant, Hampshire, PO9 2AX 023 9244 6525 planning.development@havant.gov.uk

2.0 INTRODUCTION

2.1 This Arboricultural Method Statement (AMS) has been produced in line with BS 5837 2005 Trees in Relation to Construction-Recommendations to aid the successful retention of trees on and adjacent to the proposed development site at land to the rear of 34 Gladys Avenue, Cowplain. No development shall take place on the site until this document has been submitted to and approved in writing by Havant Borough Council.

2.2 This document sets out the methodology for all proposed works that affect trees on and adjacent to the site. Compliance with this method statement will be a requirement of all relevant contracts associated with the development proposals. Copies of this document will be available on site for inspection.

2.3 For details of trees to be retained and location and types of special protection methods, reference should be made to the Tree Protection Plan (TTP). A copy of which should be displayed prominently on site.

3.0 PHASING OF DEVELOPMENT

3.1 Phase 1 – Pre Development Phase

- The client and project Arboriculturalist meet on site to discuss all aspects of the development that affects the trees on or adjacent to site and to ensure understanding of this document. Following discussion any clarifications or amendments to be copied to all site personnel.

- The proposed foundation will breach the RPA of T1 therefore an exploratory trench will be dug by hand and under supervision of the retained Arboriculturalist during the first phase of development to ascertain the level of root spread in this area. The trench will follow the line of the proposed foundation within the RPA's of T1 and T2. Its location is shown in green on the TPP. Root size, density and location will inform foundation design in this area and if major roots over 50mm diameter are encountered, mini piles and a suspended beam will be used to help to prevent mechanical damage to the tree roots and provide a continued area for root growth following completion of the development.

- Details of the foundations and methodology for their construction will be submitted as part of the planning application (if time allows) or otherwise can be submitted in response to an appropriate planning condition.

- Tree protection measures to be installed under the supervision of the retained Arboriculturalist for all retained trees

- The protective fencing erected will be in accordance with Section 9 Figure 2 of BS 5837 2005. Where feasible, the positions of the fencing will be based on a distance equivalent to the radius of each tree's RPA. Once erected all weather signage should be displayed stating 'Tree Protection Area Keep Out'.

- Other than works detailed within this Method Statement and approved in writing by the LPA, no works shall take place within the RPAs of the retained trees. The LPA Tree Officer or the named Arboriculturalist must supervise any such works.

3.2 Phase 2 – Construction Phase

Access into Site

Construction vehicles will only start to enter the site once the tree protection fencing has been erected.

Foundations

Details of foundation design will be submitted after an exploratory hand-dug trench has been established under the supervision of the retained Arboriculturalist to ascertain the location and size of any significant roots if present in the area shown on the Tree Protection Plan in green.

Services

Currently it is not proposed to have any service runs within the RPAs of the trees to be retained. However, if this changes this Method Statement will be revised to detail any methodology required to prevent damage to tree roots.

Scaffolding within the RPA

This activity is to be supervised by the named Arboriculturalist within the RPAs of the retained trees.

- T1 Oak will require scaffolding within its RPA.
- The establishment of scaffolding within the RPAs will conform to Figure 3 of BS 5837 2005.
- Ground protection measures within the RPAs will be in line with Figure 3 – Scaffolding within the RPA, BS 5837 2005 and comprise the undisturbed ground protected by geo-textile fabric, and side butting scaffold boards on a compressible layer.
- Installation of the scaffolding within the RPAs will be carried out under the supervision of the named Arboriculturalist.

3.3 Phase 3 - Landscaping Phase

New soft landscaping and tree planting will be provided and the detail of this will be subject to agreement by way of landscaping condition.

4.0 GENERAL ARBORICULTURAL CONSIDERATIONS

4.1 Protective fencing must be regarded as sacrosanct, and must only be moved under direct supervision of the LPA or named Arboriculturalist to enable the undertaking of works within the RPAs of trees as set out in this AMS and approved in writing by the LPA. It is of paramount importance the fencing is repositioned correctly after any agreed operations.

4.2 No materials, chemicals, machinery or vehicles must be stored within the RPAs as defined on the TPP and identified on site by protective fencing and aboveground root protection.

4.3 Ground protection must not be lifted or removed without prior consultation with the LPA or named Arboriculturalist.

4.4 *Damage caused to protective fencing or ground protection must be reported to the site* supervisor and the named Arboriculturalist to ensure appropriate repair.

4.5 Any damage to retained trees must be reported without delay to the site supervisor, the LPA and the named Arboriculturalist so appropriate remedial work can take place without delay.

4.6 No materials that are likely to have an adverse effect on tree health such as oil, bitumen or cement will be stored or discharged within 5 metres of the trunk of the retained trees or any other trees on the site.

4.7 No fires will be lit on site.

4.8 Notice boards, telephone cables or any other signage or services are not to be attached to any part of the retained trees.

5.0 SUPERVISION AND MONITORING

5.1 A retained Arboriculturalist shall be responsible for supervising the following works.

- Establishment of the exploratory trench within the RPA of T1
- Installation of protective fencing
- Establishment of scaffolding within the RPAs of retained trees including ground protection.
- Foundation establishment within the RPA's of retained trees.

5.2 A retained Arboricultural consultant will be responsible for periodical monitoring and they will inspect the protective fencing and monitor any works necessary within the exclusion zones. A record of site visits will be maintained for inspection on site and copies forwarded to the agent and planning authority when requested.

Please note this AMS is not a contract. The retention and services of a project Arboriculturist for supervision and monitoring must be agreed prior to commencement of construction operations.

CREDENTIALS OF THE AUTHOR

Sarah Johnston M. Arbor. A., B.Sc. Arboriculture has worked in the Arboricultural profession for ten years. Her experience has been gained from undertaking practical tree work as well as working as an Arboricultural Surveyor and Tree Officer for Eastleigh and Havant Borough Councils respectively. In addition Sarah worked as a consultant for Marishal Thompson for two years from 2005 when she became self-employed. Sarah is a Professional Member of the Arboricultural Association and holds both Professional Indemnity and Public Liability insurance cover trading as Johnston Tree Consultancy.

Table 1 — Cascade chart for tree quality assessment

TREES FOR REMOVAL		
Category and definition	**Criteria**	**Identification on plan**
Category R Those in such a condition that any existing value would be lost within 10 years and which should, in the current context, be removed for reasons of sound arboricultural management	• Trees that have a serious, irremediable, structural defect, such that their early loss is expected due to collapse, including those that will become unviable after removal of other R category trees (e.g. where, for whatever reason, the loss of companion shelter cannot be mitigated by pruning) • Trees that are dead or are showing signs of significant, immediate, and irreversible overall decline • Trees infected with pathogens of significance to the health and/or safety of other trees nearby (e.g. Dutch elm disease), or very low quality trees suppressing adjacent trees of better quality NOTE Habitat reinstatement may be appropriate (e.g. R category tree used as a bat roost, installation of bat box in nearby tree)	DARK RED

TREES TO BE CONSIDERED FOR RETENTION				
Category and definition	**Criteria — Subcategories**			**Identification on plan**
	1 Mainly arboricultural values	**2 Mainly landscape values**	**3 Mainly cultural values, including conservation**	
Category A **Those of high quality and value:** in such a condition as to be able to make a substantial contribution (a minimum of 20 years is suggested)	Trees that are particularly good examples of their species, especially if rare or unusual, or essential components of groups or of formal or semi-formal arboricultural features (e.g. the dominant and/or principal trees within an avenue)	Trees, groups or woodlands which provide a definite screening or softening effect to the locality in relation to views into or out of the site, or those of particular visual importance (e.g. avenues or other arboricultural features assessed as groups)	Trees, groups or woodlands of significant conservation, historical, commemorative or other value (e.g. veteran trees or wood pasture)	LIGHT GREEN
Category B **Those of moderate quality and value:** those in such a condition as to make a significant contribution (a minimum of 20 years is suggested)	Trees that might be included in the high category, but are downgraded because of impaired condition (e.g. presence of remediable defects including unsympathetic past management and minor storm damage)	Trees present in numbers, usually as groups or woodlands, such that they form distinct landscape features, thereby attracting a higher collective rating than they might as individuals; but which are not, individually, essential components of formal or semi-formal arboricultural features (e.g. trees of moderate quality within an avenue that includes better). A category specimen, or trees situated mainly internally to the site, therefore of limited value having little visual impact on the wider locality	Trees with clearly identifiable conservation or other cultural benefits	MID BLUE
Category C **Those of low quality and value:** currently in adequate condition to remain until new planting could be established (a minimum of 10 years is suggested) or young trees with a stem diameter below 150 mm	Trees not qualifying in higher categories	Trees present in groups or woodlands, but without this conferring on them significantly greater landscape value, and/or trees offering low or only temporary screening benefit	Trees with very limited conservation or other cultural benefits	GREY
	NOTE Whilst Category trees will usually not be retained where they would impose a significant constraint on development, young trees with a stem diameter of less than 150 mm should be considered for retention.			

© BSI 2005 No reproduction without BSI permission

9.3 Ground protection

9.3.1 Where it has been agreed during the design stage, and shown on the tree protection plan, that vehicular or pedestrian access for the construction operation may take place within the root protection area (RPA), the possible effects of construction activity should be addressed by a combination of barriers and ground protection. The position of the barrier may be shown within the RPA at the edge of the agreed working zone but the soil structure beyond the barrier to the edge of the RPA should be protected with ground protection.

9.3.2 For pedestrian movements within the RPA the installation of ground protection in the form of a single thickness of scaffold boards on top of a compressible layer laid onto a geotextile or supported by scaffold may be acceptable (see Figure 3).

9.3.3 For wheeled or tracked construction traffic movements within the RPA the ground protection should be designed by an engineer to accommodate the likely loading and may involve the use of proprietary systems or reinforced concrete slabs (see **11.8** and **11.9**).

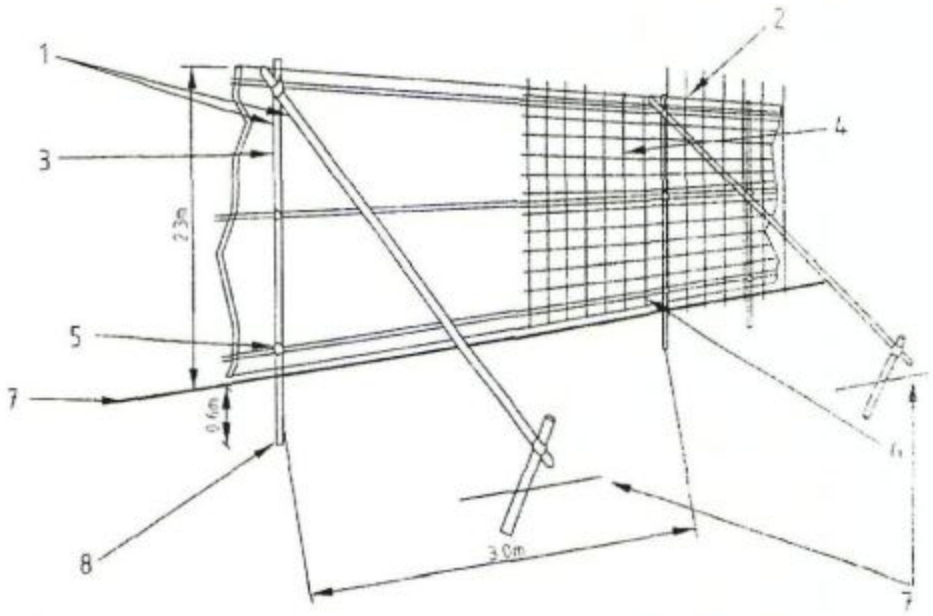

1 Standard scaffold poles
2 Uprights to be driven into the ground
3 Panels secured to uprights with wire ties and where necessary standard scaffold clamps
4 Weldmesh wired to the uprights and horizontals
5 Standard clamps
6 Wire twisted and secured on inside face of fencing to prevent easy dismantling
7 Ground level
8 Approx. 0.6 m driven into the ground

Figure 2 — Protective barrier

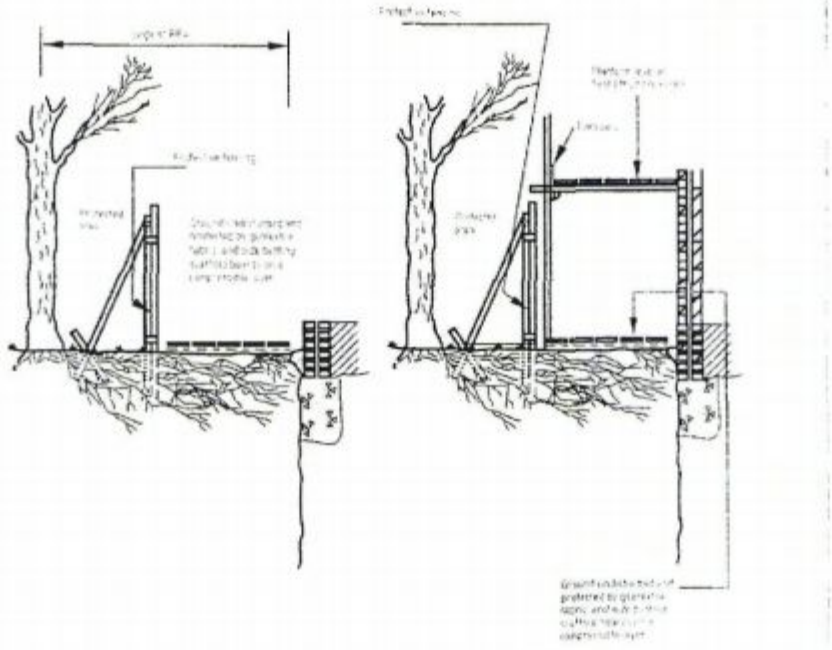

Figure 3 — Scaffolding within the RPA

9.4 Additional precautions outside the exclusion zone

9.4.1 Once the exclusion zone has been protected by barriers and/or ground protection, construction work can commence. All weather notices should be erected on the barrier with words such as:

"Construction exclusion zone — Keep out"

9.4.2 In addition the following should be addressed or avoided.

a) Care should be taken when planning site operations to ensure that wide or tall loads, or plant with booms, jibs and counterweights can operate without coming into contact with retained trees. Such contact can result in serious damage to them and might make their safe retention impossible. Consequently, any transit or traverse of plant in close proximity to trees should be conducted under the supervision of a banksman to ensure that adequate clearance from trees is maintained at all times. In some circumstances it may be impossible to maintain adequate clearance thus necessitating access facilitation pruning (see **11.2.1**).

b) Material which will contaminate the soil, e.g. concrete mixings, diesel oil and vehicle washings, should not be discharged within 10 m of the tree stem.

c) Fires should not be lit in a position where their flames can extend to within 5 m of foliage, branches or trunks. This will depend on the size of the fire and the wind direction.

d) Notice boards, telephone cables or other services should not be attached to any part of the tree.

© BSI 16 September 2005



PROTECTIVE FENCING. THIS FENCING MUST BE MAINTAINED IN ACCORDANCE WITH THE APPROVED PLANS AND DRAWINGS FOR THIS DEVELOPMENT.



TREE PROTECTION AREA

KEEP OUT !

(TOWN & COUNTRY PLANNING ACT 1990)
TREES ENCLOSED BY THIS FENCE ARE PROTECTED BY PLANNING CONDITIONS AND/OR ARE THE SUBJECTS OF A TREE PRESERVATION ORDER.
CONTRAVENTION OF A TREE PRESERVATION ORDER MAY LEAD TO CRIMINAL PROSECUTION

ANY INCURSION INTO THE PROTECTED AREA MUST BE WITH THE WRITTEN PERMISSION OF THE LOCAL PLANNING AUTHORITY