PERMIT

BJH.0502

Bernie Harverson
arboricultural consultant



HAVANT BOROUGH COUNCIL
24 MAY 2011
RECEIVED

ARBORICULTURAL METHOD STATEMENT

for

5 Hampton Close, Waterlooville

*- prepared on behalf of **Mr Daryn Brewer** -*

Bernie Harverson M.Arb.
3 foxcombe cottages • south harting • west sussex • gu31 5pl
tel: 01730 825297 • mob: 07875 520881 • email: bernie.harverson@virgin.net • VAT Reg No. 881 5056 16

Bernie Harverson

ARBORICULTURAL METHOD STATEMENT (AMS) & TREE PROTECTION PLAN (TPP)

Client	***Mr Daryn Brewer***
Site Location	**5 Hampton Close, Waterlooville**
Project Arboricultural Consultant:	Bernie Harverson *M.Arb.,*
Date Report Prepared	May 2011

I

Section	Subject Heading
1	INTRODUCTION & CLIENTS BRIEF
2	DOCUMENT DISCLOSURE STATEMENT
3	TREE SURVEY & ROOT PROTECTION SCHEDULE
4	ARBORICULTURAL METHOD STATEMENT & TREE PROTECTION PLAN
5	PRE – DEVELOPMENT TREE WORK & WORKING WITHIN THE RPA
6	MONITORING & SITE SUPERVISION
7	CONCLUSIONS

Appendices	Subject
BH1	**Figure 1** -Flow Diagram from BS5837 + Tree Survey Notes
BH2	AIA Tree Constraints Plan (**TCP**) – **BH.01/02**
BH3	Tree Protection Plan–**BH.03** + BS5837 Figure 2 & 3 Diagrams + Example Warning Notices
BH4	**BS5837 Extracts** – including Table 3 and Sections 13 &14 & 15 & NJUG10 Extracts
BH5	Qualifications & Experience

1.0 INTRODUCTION & CLIENTS BRIEF

1.1 My client – ***Daryn Brewer*** is the owner of the property at 5 Hampton Close and is seeking approval to redevelop the site adding an extension to the north elevation of his property.

1.2 There are no trees on the application site itself within a distance where they could be impacted by the proposals but there is a TPO'd ***Pedunculate Oak*** tree on an adjacent triangle of open space land.

1.3 I have been commissioned to consider the impact that development might have on this tree and advise on a management strategy to avoid damage to same during the construction process.

1.4 I am instructed to prepare a **Method Statement & Tree Protection Plan** - based on the planning layout submitted to me by ***Martin Ralph***.

1.5 My work is to be compiled in accordance with the Recommendations contained within BS5837:2005.

2.0 DOCUMENT DISCLOSURE STATEMENT

2.1 A copy of the Planning Layout drawing as prepared by **Martin Ralph Chartered Surveyors** has been provided to me for the purposes of my work and I rely totally on the accuracy of this drawing.

3.0 TREE SURVEY & ROOT PROTECTION SCHEDULE

3.1 A tree survey has been prepared in accordance with BS5837 recommendations.

Tree No	Species	Ht m	S / M	Trnk Dia mm	Brch Sprd m	Gr Cl m	Age	F	Condition Comments	Rem Con in yrs	Cat
1 TPO tree	Pedunculate Oak *Quercus robur*	15	S	400	N2 E3 S4 W3	4	Y	P	Epicormics on trunk and through crown resulting from heavy topping out in the past twelve months-suppressed to the north side by other trees in the copse-crown lifted to 4m above ground	20-30	C1









3.2 From the data gathered I have prepared a Tree Root Protection Schedule in accordance with BS5837 recommendations.

Tree No.	Tree Species	Grade	Single or Multi Stem	Diam mm	BS5837:2005 Table2-Radial Protect. Zone m	BS5837:2005 Table2- Root Protect. Area m^2	Is An Offset Required To Cater For Existing Rooting Pattern Restrictions
1	Pedunculate Oak *Quercus robur*	C1	S	400	4.8	72.4	NO – fairly free rooting to all directions

3.3 The proposed new extension extends 3.6m to the north side of the existing building which puts it a total of 4.8m from the centre of the trunk of the Oak tree. This equates exactly to the specified radial RPA for this tree. However, the existing close boarded boundary fence is positioned at a distance of 4.35m from the centre of the tree and immediately beyond this on the house side the soil has been cut back vertically with a 500mm drop in levels and a low retaining wall has been erected 350mm back from the fence line and backfilled with aggregate. This work was undertaken some time ago prior to the new owners taking possession and therefore any roots will have been severed down to around 700mm allowing for the footings and this will have gone directly through the main rooting zone for the Oak tree. Added to this there were once two trees of similar size to the one which remains and these were positioned alongside the boundary fence and their roots will have competed with the remaining Oak for rooting space and it is therefore very unlikely that any roots from T1 will be found in any new excavation for the footings of the extension within the boundary line of the property. To add further to this the subject tree has been very heavily topped out in the past twelve months and thus its root system will have entrenched as there is very minimal crown area to support. Given the precedent that has been set by the Council in allowing the topping out works to this and four other trees alongside the footpath the works to these trees will need to be repeated periodically to prevent them causing the same problems for the neighbours (who organised the works) and thus this tree will not develop a full and extensive root system in the future as there will be minimal crown to support.

3.4 In order to facilitate construction there will need to be some basic ground protection measures applied to protect the roots between the current fence line and the trunk of the tree. The two tree stumps will remain and the ground is covered in tufted grass clumps and brambles and weeds and this will need to be strimmed down in order to lay the ground protection.

3.5 I have been informed that in view of the heavy clay soil a 'raft' form of foundation will be laid to support the new extension (full details of which are to be supplied by structural engineers) and this requires some 700mm depth of excavation within the property boundaries but for the reasons stated above I would see no conflict with the retained Oak trees roots in this respect.

4.0 PRE-DEVELOPMENT TREE WORK and WORKING WITHIN THE RPA

4.1 Undertake all development facilitation tree pruning works as listed in the following Tree Works Schedule prior to any other site works being carried out.

No	Species	Tree Works Recommended
1	Pedunculate Oak *Quercus robur*	• An off site tree not in owners control • No works required at this time

5.0 ARBORICULTURAL METHOD STATEMENT & TREE PROTECTION PLAN

5.1 **Construction Phase –**

Specific Actions:

5.1.1 The first action required will be to strim the grass and weeds and brambles in the area shown to receive ground protection on the Tree Protection Plan BH.03 at appendix BH3 and then lay a geotextile membrane and cover this with thick plywood sheets to protect the ground and allow for light loaded vehicles such as a mini digger to facilitate construction of the footings for the new extension (tree stumps to remain in situ but cut down further and remove shoots).

5.1.2 Next take down the existing wooden fence panels and re-erect them using 'metpost' driven supports to act as the protective fencing for the duration of the build – see location shown on Plan BH.03.

5.1.3 Carefully remove the existing low retaining wall and footings and then remove the aggregate to expose the bare soil banking; immediately following this action insert reinforced concrete panels to hold back the soil and act as 'gravel board' supports for the new fence when it is re-erected with concrete support posts as before. The excavation for the raft foundation may now proceed within the site boundaries.

5.1.4 On completion of the main construction phase of works re-erect the boundary fence along the existing alignment using the concrete gravel boards and new concrete post supports.

5.1.5 All utility service connections are shown to go out to the front or around the rear of the property and none transgress the RPA for the Oak tree.

Generic Actions:

- It is suggested that clear and concise points of contact and lines of communication are established prior to commencement of the works on site including:- Arboricultural Consultant; Local Authority Tree Officer; Local Authority Planning Officer; Site Manager and Foreman

- It is advised that the Site Manager establishes his own listing of contact details at the Pre-Start site meeting and pins this up in site office for all to refer to.
- Care must be taken when planning site operations to ensure that wide or tall loads, or plant with booms, jibs and counterweights can operate without coming into contact with retained trees.
- **ALL** machine operators should undergo an induction session prior to being allowed to work on site, where the Method Statement is explained to them and a copy pinned up in the site office for their reference.
- In addition a copy of the Tree Protection Plan will be provided and pinned up in the site hut and the trees which are to be retained and protected will be pointed out to the operator and they will also be shown which trees these are on site before they start work. In this way it is hoped that unnecessary damage, by root disturbance and collision of machinery booms and operating arms with tree crowns can be avoided.

6.0 MONITORING & SITE SUPERVISION

- It is recommended in BS5837:2005 that either an arboriculturist or a person suitably experienced in the subject is retained to advise on all tree related aspects of site monitoring and supervision and it is the local authority's responsibility to make this a condition of planning approval with the said Condition ideally requiring a set schedule of operations and timings prior to undertaking works on site.
- In this instance with such a small project with minimal potential for impact on trees it is probably only necessary for the Tree Officer (or Consultant Arborist) to conduct a pre-start meeting to verify the position and effectiveness of the ground protection measures before work proceeds on site.

7.0 CONCLUSIONS

- No tree removal is required to facilitate development and it is extremely unlikely that there will be any adverse impact on the retained Oak tree within the adjacent copse.
- Provided that the methodology prescribed in this AMS & TPP report is strictly adhered to I would expect the retained tree to survive the development and to continue to grow on safely and healthily in the future.
- This is therefore in my opinion a fully supportable scheme in arboricultural terms.

Bernie Harverson
arboricultural consultant

BH 1

Flow Diagram & Tree Survey Notes

Bernie Harverson
arboricultural consultant

BJH.0502

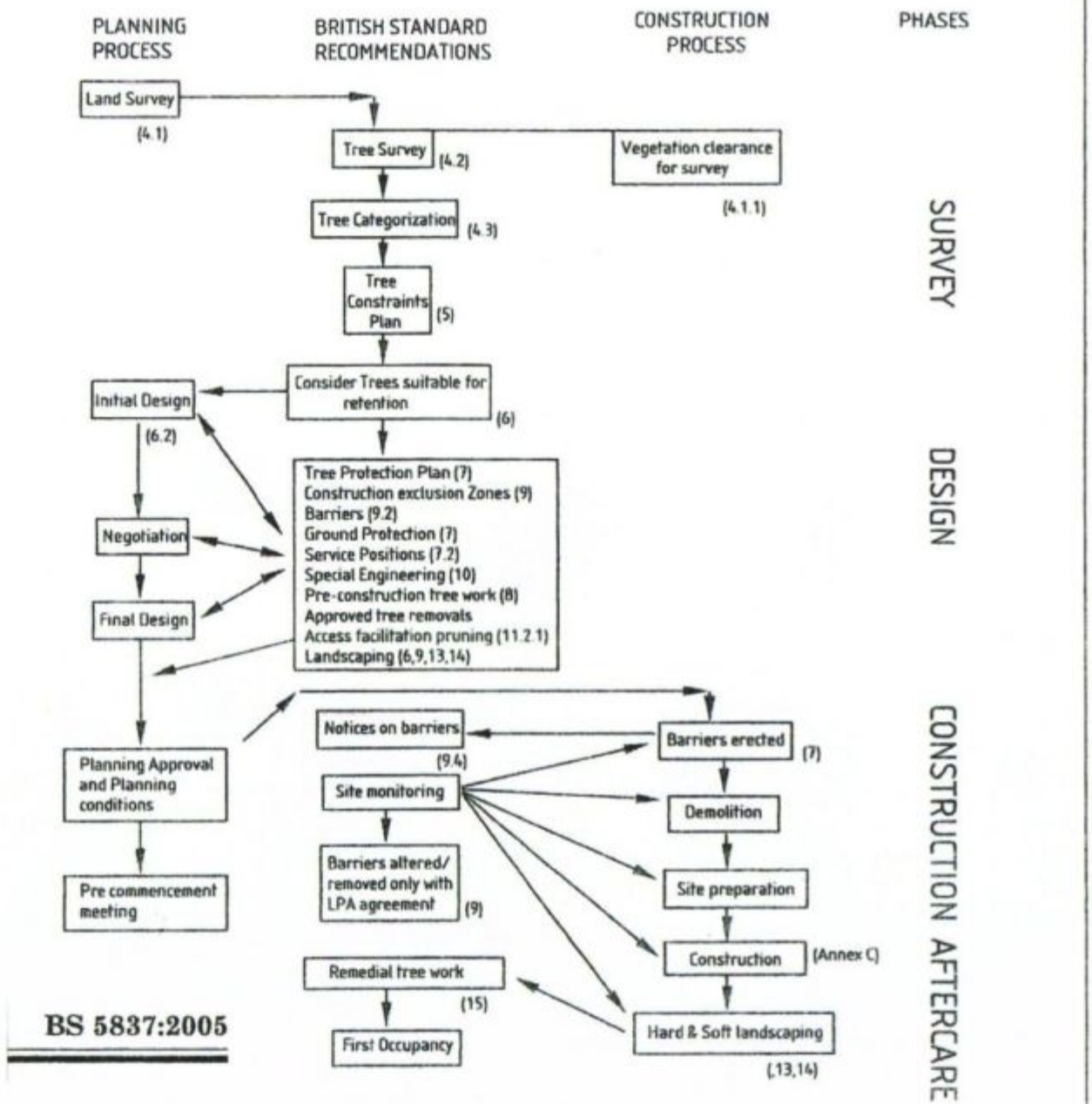

Figures in brackets refer to Clause numbers.

Figure 1 — Flow diagram, summarizing planning for trees on development sites

BJH.0502

TREE SURVEY NOTES

Bernie Harverson arboricultural consultant

These Tree Survey Notes have been prepared in accordance with the recommendations of **British Standard 5837:2005** and define the criteria for pre – development tree surveys.

- Each tree/group has been allocated a unique number (**No.**). Where specifically commissioned small durable numbered metal tags can be applied to each tree/group surveyed.
- The tree species (**Species**) is provided in both English and Latin formats.
- Height assessments (**Ht**) are estimated in metres. This will be adequate for the majority of cases, but where accurate heights become a critical issue it may be necessary to return to site, as a separately commissioned exercise, to collect accurate measurements with the aid of optical instruments.
- Trunk/stem diameters (**Trunk Diam**)are measured in millimetres at 1.5m above ground level and denoted as **S** single stemmed trees or **M** for multi-stemmed trees which are measured immediately above the root flare.
- Radial crown spread assessments (**Brch Sprd**) are estimated in metres from the centre of the trunk/group to each of the four primary points of the compass (**N**-north; **E**-east; **S**-south and **W**-west) in order to achieve a representation of the crown shape which will be recorded on the accompanying tree survey plan. These provide a general guide as to the main bulk outline of a tree/groups crown but are not tape measured dimensions. These would only be undertaken as part of a separately commissioned exercise, where precise dimensions are critical to the project at hand.
- The average ground clearance (**Grd Cl**) is estimated and shown in metres.
- An assessment of a tree/groups age (**Age**) class is made in terms of its site specific maturity as part of the surrounding landscape, taking into account its overall shape and form in that setting, and is recorded thus :-

  Y - Young tree/group
  MA - Middle – aged tree/group
  M - Mature tree/group
  OM - Over – mature tree/group
  V - Veteran tree/group

- An assessment of a tree/groups overall physiological condition (**Fm**)is recorded as :-

  G - Good
  F - Fair
  P - Poor
  D - Dead

- Data on the structural condition (**Condition Comments**) of the tree/group is provided to give an indication of its visual appearance and any significant health and safety issues.
- Details of necessary tree works required at the time of survey is given under the heading – **Preliminary Management Recommendations**
- An estimate of a tree/groups future life expectancy (**Rem Cont**) is made and is recorded thus :-
  1-10; 10-20; 20-30; 30-40 or **>40** years.
- The category grading (**Cat**) for each tree/group is assessed according to the criteria provided within **BS5837:2005.** The assessment is made of the tree/group in its current condition and within the environment encountered bearing in mind its suitability for retention as part of any future proposed development; although the exact layout detail of any specific scheme will not be known at the time of surveying. The trees have been classified into one of four categories and colour coded as BS5837 recommends - **R** (dark red); **A** (light green); **B** (mid-blue) and **C** (grey).Please note that the numerical sub-categories which are also applied are for guidance only and do not carry any cumulative or increased value for the tree/group. This colour coding scheme will be applied to all drawings provided.

Table 1 – Cascade chart for tree quality assessment

TREES FOR REMOVAL				
Category and definition	**Criteria**			**Colour on plan**
Category R Those in such a condition that any existing value would be lost within 10 years and which should, in current context, be removed for reasons of sound arboricultural management.	• Trees that have a serious, irremediable, structural defect, such that their early loss is expected due to collapse, including those that will become unviable after removal of other **R** category trees (i.e. where, for whatever reason the loss of companion shelter cannot be mitigated by pruning) • Trees that are dead or are showing signs of significant, immediate, and irreversible overall decline • Trees infected with pathogens of significance to the health and/or safety of other trees nearby (e.g. Dutch Elm Disease), or very low quality trees suppressing adjacent trees of better quality			Dark Red
TREES TO BE CONSIDERED FOR RETENTION				
	Criteria – Subcategories			
	1	**2**	**3**	
Category A – Those of high quality and value: in such a condition as to be able to make a substantial contribution (a minimum of 40 years is suggested)	Trees that are particularly good examples of their species, especially if rare or unusual, or essential components of groups, or of formal or semi-formal arboricultural features (e.g. the dominant and/or principal trees within an avenue)	Trees, groups or woodlands which provide a definite screening or softening effect to the locality in relation to views into or out of the site, or those of particularly visual importance (e.g. avenues or other arboricultural features assessed as groups)	Trees, groups or woodlands of significant conservation, historical, commemorative or other value (e.g. veteran trees or wood-pasture)	Light Green
Category B – Those of moderate quality and value: in such a condition as to make a significant contribution (a minimum of 20 years is suggested)	Trees that might be included in the high category, but are downgraded because of impaired condition(e.g. presence of remediable defects including unsympathetic past management and minor storm damage)	Trees present in numbers, usually as groups or woodlands, such that they form distinct landscape features, thereby attracting a higher collective rating 3than they might as individuals but which are not, individually, essential components of formal or semi-formal arboricultural features (e.g. trees of moderate quality within an avenue that includes better, A category specimens), or trees situated mainly internally to the site, therefore individually having little visual impact on the wider locality	Trees with clearly identifiable conservation or other cultural benefits	Mid Blue
Category C – Those of low quality and value: currently in adequate condition to remain until new planting could be established (a minimum of 10 years is suggested), or young trees with a stem diameter below 150mm	Trees not qualifying in higher categories	Trees present in groups or woodlands, but without this conferring on them significantly greater landscape value, and/or trees offering low or only temporary screening benefit	Trees with very limited conservation or other cultural benefits	Grey
Note: Whilst **C** category trees will usually not be retained where they would impose a significant constraint on development, young trees with a stem diameter of less than 150mm should be considered for relocation				

Bernie Harverson
arboricultural consultant

BH 2

Tree Survey & Constraints Plan BH.01/02

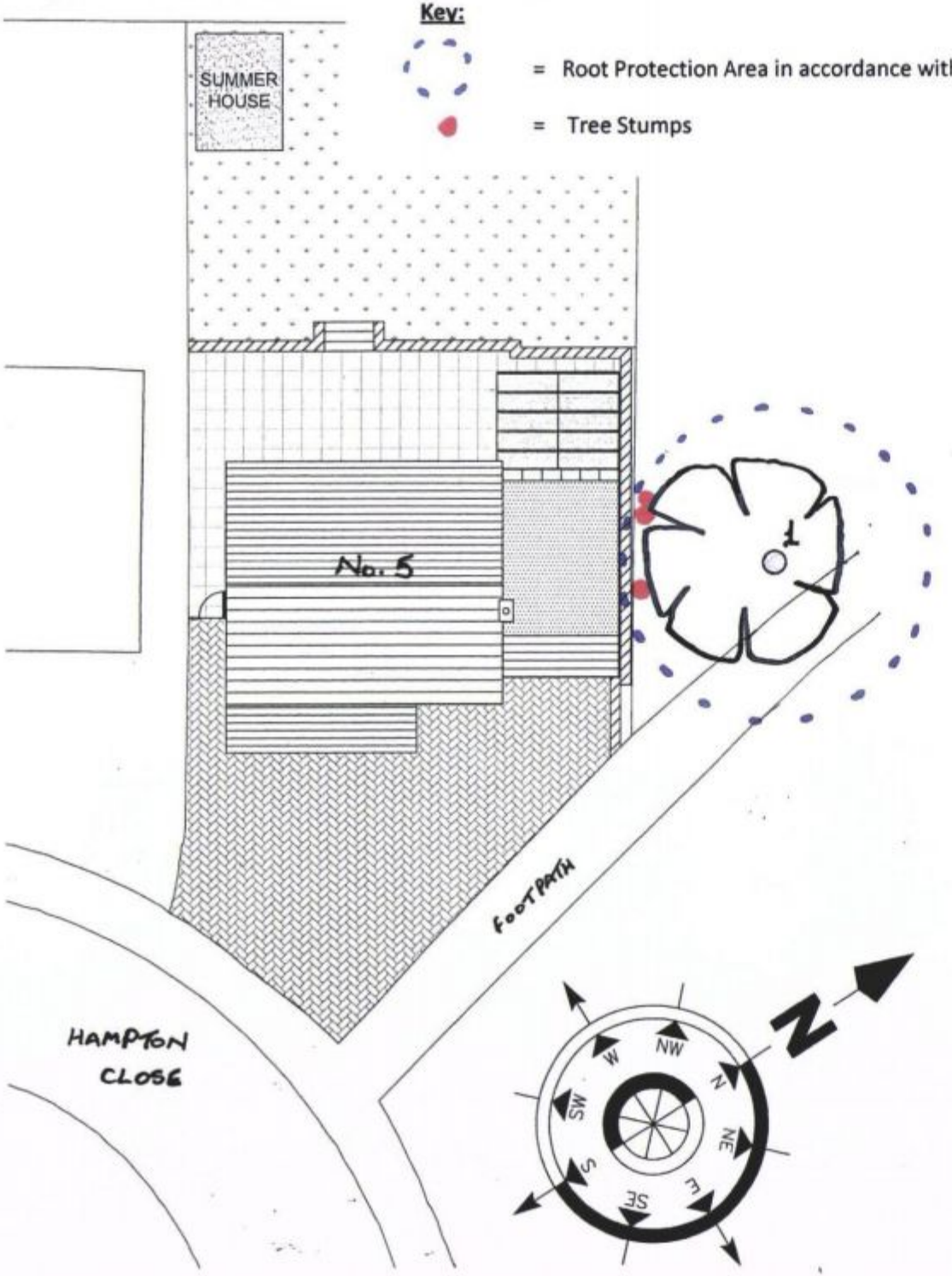

Bernie Harverson
arboricultural consultant

project:	**5 Hampton Close Waterlooville Hampshire**
client:	**Mr D Brewer**
drawing title:	**Tree Survey & Constraints Plan**
drawing no.	**BH.01/02**
scale:	**1:200**
date:	**May 2011**
job no:	**0502**
drawn by:	**bjh**

Bernie Harverson M.Arb.
3 foxcombe cottages • south harting • west sussex • gu31 5pr
tel: 01730 825297 • mob: 07875 520881 • email: bernie.harverson@virgin.net • VAT Reg No. 881 5556 16

Bernie Harverson
arboricultural consultant

BH 3

Tree Protection Plan - BH 03



Bernie Harverson
arboricultural consultant

project:	**5 Hampton Close Waterlooville Hampshire**
client:	**Mr D Brewer**
drawing title:	**Tree Protection Plan**
drawing no.	**BH.03**
scale:	**1:200**
date:	**May 2011**
job no:	**0502**
drawn by:	**bjh**

Bernie Harverson M.Arb.
3 foxcombe cottages • south harting • west sussex • gu31 5pl
tel: 01730 825297 • mob: 07875 520881 • email: bernie.harverson@virgin.net • VAT Reg No. 881 5256 16

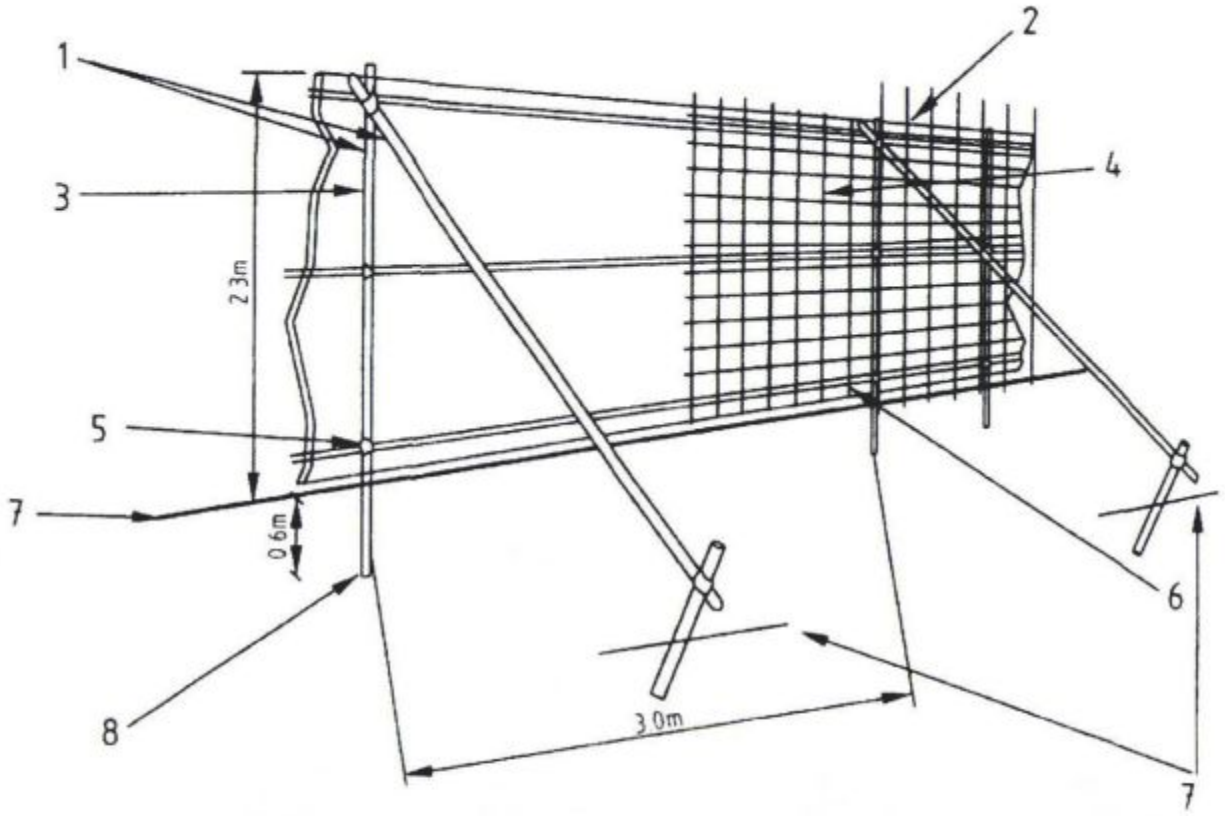

1. Standard scaffold poles
2. Uprights to be driven into the ground
3. Panels secured to uprights with wire ties and where necessary standard scaffold clamps
4. Weldmesh wired to the uprights and horizontals
5. Standard clamps
6. Wire twisted and secured on inside face of fencing to avoid easy dismantling
7. Ground level
8. Approximately 0.6m driven into the ground

Figure 2 - Protective Barrier

Extract taken from BS5837:2005

9.2 Barriers

9.2.1 Barriers should be fit for the purpose of excluding construction activity and appropriate to the degree and proximity of work taking place around the retained tree(s). On all sites, special attention should be paid to ensuring that barriers remain rigid and complete.

9.2.2 In most cases, barriers should consist of a scaffold framework in accordance with Figure 2. comprising a vertical and horizontal framework, well braced to resist impacts, with vertical tubes spaced at a maximum interval of 3m. Onto this, Weldmesh panels should be securely fixed with wire or scaffold clamps. Weldmesh panels on rubber or concrete feet are not resistant to impact and should not be used.

NOTE The above is preferred because it is readily available, resistant to impact, can be re-used and enables inspection of the protected area.

9.2.3 It may be appropriate on some sites to use temporary site office buildings as components of the tree protection barriers.

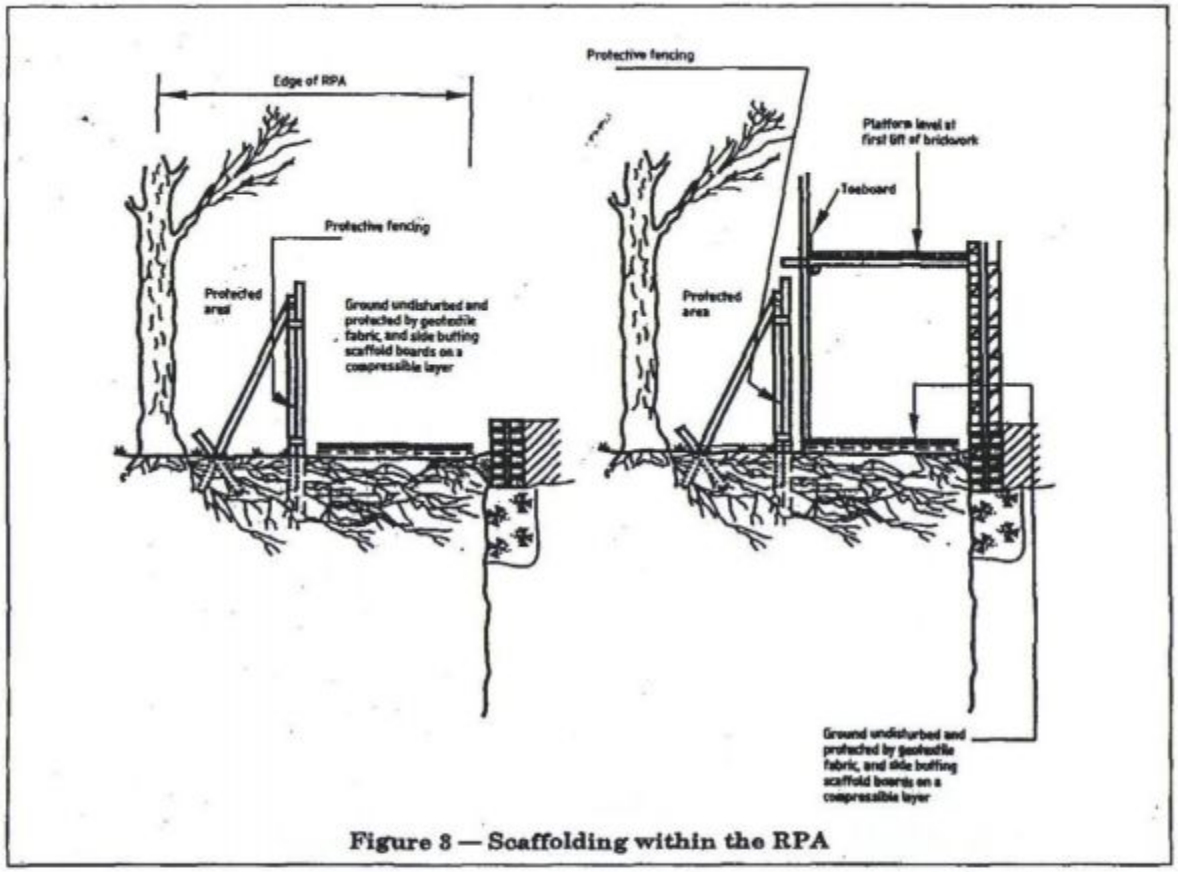

Figure 3 — Scaffolding within the RPA

Extract taken from BS5837:2005

9.3 Ground Protection

9.3.1 Where it has been agreed during the design stage, and shown on the tree protection plan, that vehicular or pedestrian access for the construction operation may take place within the root protection area (RPA), the possible effects of construction activity should be addressed by a combination of barriers and ground protection. The position of the barrier may be shown within the RPA at the edge of the agreed working zone, but the soil structure beyond the barrier to the edge of the RPA should be protected with ground protection.

9.3.2 For pedestrian movements within the RPA the installation of ground protection in the form of a single thickness of scaffold boards on top of a compressible layer laid onto a geotextile, or supported by scaffold, may be acceptable (see Figure 3).

9.3.3 For wheeled or tracked construction traffic movements within the RPA the ground protection should be designed by an engineer to accommodate the likely loading and may involve the use of proprietary systems or reinforced concrete slabs (see **11.8 and 11.9**).

BJH.0502

TREE PROTECTION AREA

KEEP OUT

- NO EXCAVATION OR TRENCHING WORKS PERMITTED
- NO STORAGE OF PLANT OR MATERIALS PERMITTED
- NO VEHICLE ACCESS PERMITTED
- NO FIRE LIGHTING PERMITTED
- NO CHEMICAL HANDLING
- VEHICLES WORKING CLOSE TO PROTECTIVE FENCING MUST AVOID CONTACT WITH OVERHANG FROM TREE CANOPY

Common causes of Tree Death

BJH.0502

The use of properly positioned protective fencing can prevent tree deaths occurring.

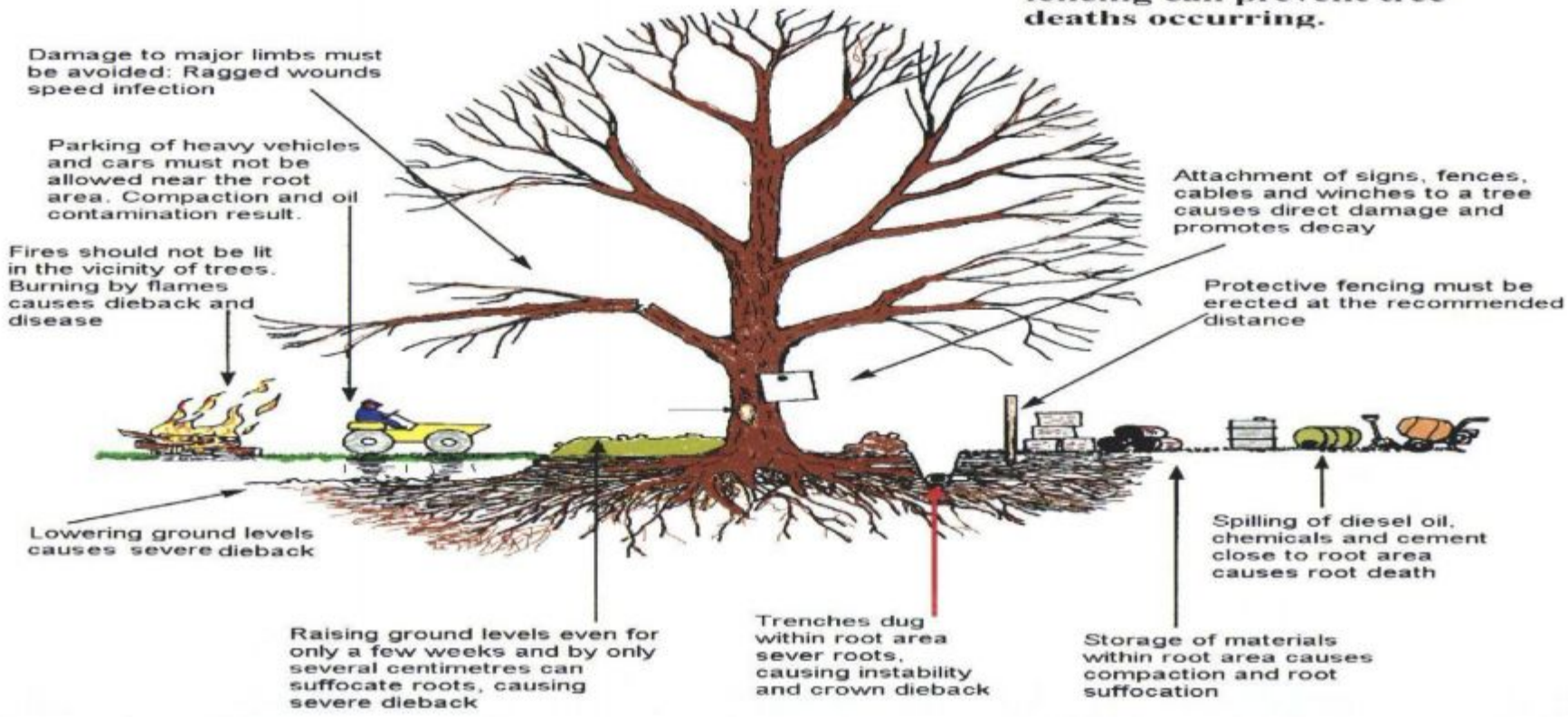

Please use copies of this as an on-site poster for personnel

Bernie Harverson
arboricultural consultant

BH 4

BS 5837:2005 Extracts

Table 3 - Sections 13, 14 and 15

Table 3 – Minimum distance (m) between young trees or new planting and structures to avoid direct damage to a structure from future growth.

Type of Structure	Diameter of stem at 1.5m above ground level at maturity		
	<30cm	(30-60) cm	>60cm
Buildings and heavily loaded structures	-	0.5	1.2
Lightly loaded structures such as garages and porches	-	0.7	1.5
Drains and underground services:			
<1m deep	0.5	1.5	3.0
>1m deep	-	1.0	2.0
Masonry boundary walls[a]	-	0.5	1.0
	-	(1.0)	(2.0)
In situ concrete paths and drives[a]	-	0.5	1.5
	(0.5)	(1.0)	(2.5)
Paths and drives with flexible surfaces or paving slabs[a]	-	0.5	1.0
	(0.7)	(1.5)	(3.0)

[a] **These distances assume that some movement and minor damage might occur. Guidance on distances which will generally avoid all damage is given in brackets.**

13 Design considerations for new planting

13.1 General

13.1.1 The purpose of proposed new planting should be understood from the start of the design process so that appropriate choices of structure, location and species can be made. Advice on detailed design should be sought from a landscape architect or other competent person experienced in landscape design.

13.1.2 Trees may perform a variety of roles, both aesthetic and functional:

- shelter planting to benefit buildings, people, crops or stock;
- screen planting to hide the unsightly or create privacy;
- planting to define or divide spaces, or to define or direct routes or views;
- specimens or groups can be used for architectural effect to complement buildings;
- for their inherent aesthetic qualities;
- providing character or sense of place;
- softer, natural elements to counter the artificial lines of the built environment;
- for their contribution to nature conservation, biodiversity and biomass;
- reducing air pollution; providing shade and controlling erosion.

13.1.3 All new tree planting proposals should take into consideration the future use, layout and design of a development site, constraints of soil and climate, the local landscape character and the contextual surroundings. As trees generally form the dominant elements of the long-term landscape structure of a site, careful consideration should be given to their ultimate height and spread, form, habit and colour, density of foliage and maintenance implications.

13.2 Planting adjacent to buildings

13.2.1 On all soils, it is inadvisable to plant trees at distances closer to a structure than those shown in Table 3 unless special precautions have been taken. Paths, patios and driveways, where they are not constructed to appropriate standards (see **10.3 and [14]**) can be vulnerable to damage by trees with surface rooting characteristics. In addition, on shrinkable soils account should be taken of the foundation construction of existing and proposed nearby structures; planting should not compromise the structural performance of the foundation.

13.2.2 The effect of shade created by new trees and the likely extent and density of the tree crown when fully grown should be taken into consideration before new planting adjacent to buildings. Careful design and species selection should allow residents to enjoy reasonable light and the trees to develop into mature specimens. Special care should be exercised when considering planting large and/or fast growing evergreen trees as screens or hedging as these can be particularly oppressive, obstructing light all year round and requiring frequent maintenance to restrict their growth.

NOTE For information on planting adjacent to boundaries see Annex A and [6], [12] and [13].

13.3 Planting adjacent to roads

Roadside trees can make a significant contribution to the character of new developments. Their siting and species selection should be carefully co-ordinated at an early stage with other highway design considerations and, in the case of adopted roads, with the agreement of the relevant highway authority.

Sight line requirements, lighting schemes, CCTV, underground and overhead service routes and avoidance of physical obstruction or damage should all be taken into account with due consideration for future growth and periodic maintenance requirements.

13.4 Planting in the vicinity of services

Trees should not be planted where they might obstruct overhead power lines or cables. In new developments, underground services should be ducted or otherwise protected at the time of construction to enable trees to be planted nearby without conflict (see utilities guidance documents [17]). Root barriers should be constructed, where considered necessary, under expert advice to reduce the risk of tree root intrusion into service runs.

14 Ground works and preparation for new planting

NOTE BS 4428 contains recommendations and guidance on general landscape operations with sections on preliminary investigation, drainage, grading and cultivation, tree planting and woodland planting.

14.1 Drainage

New development may have an effect on the existing drainage pattern and ground water levels of a site, due to increased areas of hard surface and consequential drainage requirements. Existing trees may suffer due to an alteration in the supply of groundwater, whilst younger specimens and new plantings may be more likely to adapt to the changed conditions. Expert advice on both drainage and trees should be taken where ground water conditions are liable to such change.

14.2 Soil conditions

Before any of the landscape operations listed in BS4428 are undertaken and where contamination is apparent, soils in areas to be planted should be analysed for structure and content by a specialist laboratory and expert advice taken on remediation measures for new planting if this is required. If contaminants (e.g. oil or diesel fuel, toxic materials, heavy metals, etc.) are present, soils should either be removed to the full depth for planting and new soil imported or expert advice obtained on remediation measures, which may include limiting the choice of species for planting. Where the structure of the soil is in an unsuitable condition to encourage growth, a number of remediation measures may be required including physical decompaction by mechanical plant or compressed air injection, the incorporation of bulky additive materials and new drainage systems. The advice of an arboriculturist should be sought for all works in the root protection area.

14.3 Surfaces around newly planted trees

NOTE BS4428 provides recommendations for the treatment of soft surfaces, but excludes hard surfaces.

14.3.1 Where surfaces are paved, the settlement of the soil in tree pits which occurs gradually after planting may cause movement of the paved areas. This may involve the partial collapse or instability of paving or disruption of flexible surfaces, where these are laid over prepared pits. The unpaved area around new plantings should, therefore, be of an adequate size to enable surrounding paving to be retained by a conventional edging and foundation (e.g. brick, concrete, stone or treated timber) set at a distance where it is unlikely to be affected by settlement. It may be appropriate for the outer edges of the backfilled area to be treated as a transition zone using interlocking surface reinforcement grids backfilled with a surface dressing of a permeable, granular material (e.g. gravels, shingles and other aggregates) which can be topped up if required. Due allowance should be made for future growth of stem and roots of a tree when considering the finished dimensions and the design of edge or kerb treatments of tree pits and planted areas.

Where load-bearing paving is to be laid over pits, it should either:

a) be laid when the soil has settled and the level made good; or:

b) be laid on a supported foundation that spans the tree pit; or:

NOTE Such foundation may be constructed from reinforced concrete, or comprise bearers made from steel or concrete.

c) incorporate a tree grille with appropriate support around the edges.

d) utilise structural soil.

14.3.2 Where there is any risk of a tree pit receiving surface water run off that may be contaminated, for example by rock salt, fuel spillage or other materials that may be toxic or harmful to plants, paving should be designed and laid to fall away from the pit.

15 Post development management

15.1 Existing trees

15.1.1 Trees growing on a site before development takes place may, if adversely affected, be in decline over a period of several years before they die. This varies greatly depending on the age, species and condition of the tree, the soil conditions, climate and the extent of damage incurred during development. A programme of inspections and necessary work for the treatment of symptoms as they develop should be drawn up in conjunction with an arboriculturist. This programme may include recommendations for frequency of inspection and/or beneficial tree work and should take the form of an arboricultural management plan.

15.1.2 Where the trees in question are protected by planning controls, the planning authority should be informed and any necessary agreements obtained prior to such work.

15.1.3 Prior to handover, following completion of development, the arboriculturist should look for signs of intolerance to change in conditions and the effect of the development and any accidental damage to identify the need for further tree works in addition to those originally specified at the beginning of the development process.

15.1.4 An arboriculturist, should consider appropriate cultural operations. These may include irrigation, or measures to enhance the soil structure and organic nitrogen levels in the soil.

15.1.5 Where the development design incorporates the need for active management intervention following the completion of construction works, a tree or landscape management plan should be prepared and a copy supplied to all parties who may have an interest in the future management of the site or parts of it.

15.2 New plantings

Maintenance of newly planted trees is of particular importance during the critical establishment period, of at least two years and may, where required by planning conditions, be five years or more following planting. A detailed maintenance schedule covering the establishment period should be prepared in conjunction with the landscape design proposals and appropriate arrangements made for its implementation.

Bernie Harverson
arboricultural consultant

BH 5

Qualifications & Experience

Bernie Harverson
arboricultural consultant

QUALIFICATIONS AND EXPERIENCE

- My name is Bernie Harverson and I am a self employed independent arboricultural consultant in private practice. I take instructions primarily in the South of England but also on occasions work nationwide and abroad and have offices at : –
  3 Foxcombe Cottages, South Harting, West Sussex GU31 5PL and also at Cedar Court, 5 College Street, Petersfield GU31 4AE
- I hold the following arboricultural qualification - **Master of Arboriculture** (Royal Forestry Society – 1976)
- I have over **forty** years of practical and managerial experience in the arboricultural industry including periods in both the public and private sectors.
- My Local Government sector experience comprises one year as a tree surgeon with Brighton Parks and nine years spent in Arboricultural Officer posts with both Westminster City Council and Portsmouth City Council
- My past practical experience in the private sector includes two years at Tilhill Forest Nursery and over ten years for various companies as a Climbing Arborist/Tree Surgeon.
- Managerial work in the private sector includes two years as manager of Beechings tree surgery company and twelve years with CBA Trees as an Arboricultural Consultant.
- As an independent self employed Arboricultural Consultant I now provide a comprehensive range of services including :-
  tree surveys, appraisals, assessments and inspections with particular reference to planning and development and tree safety audits with a service offered as a climber to undertake full climbing inspections to better understand the condition of a given tree before prescribing a management strategy.
  - I also undertake litigation work appearing as an Expert Witness in Court Actions and at Planning Appeals, Hearings and Public Local Inquiries.

Bernie Harverson M.Arb.
3 foxcombe cottages • south harting • west sussex • gu31 5pl
tel: 01730 825297 • mob: 07875 520881 • email: bernie.harverson@virgin.net • VAT Reg No. 881 5056 16