07564346560
01243 967808
Info@fallenandfound.co.uk
Oliver@fallenandfound.co.uk
www.fallenandfound.co.uk

34
Havant Road
Emsworth
Hampshire
PO10 7JG

Fallen&Found Arboriculture Ltd

Company No: 11872391 / VAT Registration 317617696

Arboricultural Impact Appraisal

&

Preliminary Arboricultural Method Statement

Q0346\EmsworthHouseClose\AIA+(P)AMS\2024_V1

Sunday, 04 February 2024

"two, two storey detached dwellings"

Land Adjacent N06

Emsworth House Close

Emsowrth

Hampshire

PO10 7JR

Contents

Contents 1
1. Introduction 5
1.1. Instruction 5
1.2. Scope 5
1.3. Document disclosure 6
1.4. Land Survey 6
1.5. Ecological constraints 6
1.6. Qualifications and experience 6
2. Site and proposal 7
2.1. Site visit 7
2.2. Site location 7
2.3. Site description 7
2.4. Proposed development 7
3. Arboricultural Impact Assessment 8
3.1. Introduction 8
3.2. Tree retention/removal and pruning. 8
Trees, groups, and hedgerows to be retained. 8
Trees, groups, and hedgerows to be removed. 8
Trees, groups, and hedgerows to be pruned. 8
3.3. Additional implications arising from the development 10
3.3.1. Demolition and Construction within the RPA 10
3.3.2. Movement of construction machinery and staff parking 11
3.4. Tree protection 11
3.5. Ground-level changes 12
3.6. Services 12
3.7. The proximity of existing trees to proposed structures. 12
3.7.1. Direct and indirect impacts of trees 12
3.7.2. Seasonal nuisance 12
3.7.3. Future pressure to prune or fell. 13
3.7.4. Shading, orientation, and windows 13
3.8. Conclusion 13
Preliminary Arboricultural Method Statement 15

1. Summary 16
2. Site-specific considerations 16
3. Sequencing, monitoring, and supervision 17
3.1. Auditing and inspection regime 17
4. Sequenced methods of construction and tree protection 18
4.1. Pre-commencement meeting 18
4.2. Conduct agreed tree works. 18
4.3. Tree Protection 19
4.3.1. Form 19
4.3.2. Location 19
4.3.3. Setting out 20
4.3.4. LPA Involvement 20
4.3.5. Construction Exclusion Zone 20
4.3.6. Prohibitions 20
4.4. Hand digging of pile locations 21
4.5. Installation of no-dig cellular confinement system 21
4.3. Installation of piles and ground beams 22
4.6. Staff parking, storage of materials and chemical mixing 22
4.7. Main construction process 22
4.7. Construction of services 23
4.8. Erection of boundary fences 24
4.9. Soft landscaping and new planting 24
4.10. Amendments 25
4.11. Communication details, monitoring & compliance. 25
Appendix A 26
Tree Survey Schedule 26
Appendix B 27
Tree Protection Plan (Q0367\EmsworthHouseClose\TPP_V1 2024) 27
Appendix C 28
Figure 1 28
Default Tree Protective Fencing 29
Figure 2 30
Alternative Tree Protective Fencing 30
Figure 3 31

Ground Protection 31
Figure 4 32
Example of all-weather warning signs to be affixed to fencing at 10m intervals 32
Figure 5 Arboricultural Consultant Site Visit 33
Appendix D 35
5. Qualifications 36
Accreditations 36
Bibliography 37

© 2024 Fallen&Found Arboriculture Ltd

All rights to the contents of this report are reserved. No part of it may be reproduced, transmitted, or changed in any form including electronic, photocopying, or recording. This report and its contents shall not be stored in any retrieval system of any nature without the written permission of the author (Oliver Lower). This report, its contents, and format are for the sole use of Futuristic Home Developments for the purpose of dealing with the specified site. The report may not be divulged, lent, hired, or sold to a third party not directly involved in the specified site without the written consent of the author. The report may be copied and reproduced as part of the normal planning process associated with the site.

The statements made in this report do not take account of extreme weather events, rooting environment alterations, accidental damage, vandalism or works not carried out to industry recognised standards or best practice. Fallen&Found Arboriculture Ltd does not accept any liability associated with these instances. The validity of this report ceases after two years from the instance of the initial site inspection, or if the site conditions change as a result of unspecified works affecting the subject tree/s.

Quality Control			
Author	Oliver Lower	Checked by	Stephanie Smith (04/02/2024)

1. Introduction

1.1. Instruction

1.1.1. I have been instructed by you Mr Shakir Ali, to undertake an Arboricultural Impact Assessment (AIA) of a proposed development located at land adjacent to No 6, Emsworth House Close, Emsworth, Hampshire, PO10 7JR. This assessment will examine the relationship between the proposal and the tree population growing at and within an influencing distance of the site. I have also been instructed to create a Tree Protection Plan (TPP). The purpose of this plans is to provide an accurate visual representation of the juxtaposition between the proposal and the retained tree population, as well as detailing the locations of trees which are to be removed or protected throughout the development process.

1.1.2. I have also been instructed by you to create a Preliminary Arboricultural Method Statement (AMS) for the proposed development. The purpose of this document is to outline the principal methodologies required to guide the proposal through development process in a sensitive, conscientious and arboriculturally acceptable manner.

1.2. Scope

1.2.1. All my tree observations are of a preliminary nature, with the tree survey being carried out from ground level without any investigations using invasive or diagnostic equipment. All tree positions have been plotted with the use of a topographical/land survey conducted by P Stubbington Land Surveys Ltd. I have not checked the accuracy of the positions of the trees, and I have estimated all dimensions unless otherwise stated.

1.2.2. This report is only associated with the Arboricultural aspects of the site and does not relate to ecological or archaeological matters which may be present. This report and the assessments and methods prescribed or discussed within it have been constructed in accordance with British Standards (BS) 5837:2012 **"**Trees in relation to design, demolition, and construction – Recommendations.**"**

1.2.3. A full hazard assessment of the trees[1] has not been undertaken during this survey and it is considered to be beyond the scope of this report. Any obvious defects have been identified and included along with any pertinent recommendations relating to the remediation of tree-related risk are included in the BS 5837:2012 compliant tree survey schedule. The assessments contained within this report and all associated plans will be based upon the plans and information which have been provided to me by you.

[1] Including an assessment of internal decay or its significance

1.3. Document disclosure

1.3.1. You have supplied me with the following documents:

01.01 REV A - Emsworth House - STRI...	21/11/2023 12:51	DWG File
01.01 REV A - Emsworth House - STRI...	21/11/2023 18:20	DXF File
01.01 REV B - Emsworth House Road -...	27/01/2024 12:46	DWG File

1.4. Land Survey

1.4.1. I have been provided with a CAD-based topographical land survey plan which details the locations of trees, foliage, and relevant significant site details. This report and its associated plans have been written and constructed on the premise that this land survey is accurate. However, I cannot accept any responsibility for the accuracy of this information.

1.4.2. The assessments made in this document are based on the information and plans provided by Mr Mahmud Choudhury (MCA Designs) on the 27th of January 2024. The conclusions, recommendations, and discussions presented in this report have been made using the BS 5837:2012; compliant tree survey conducted by myself on the 23rd November 2023. The plans I have prepared are constructed in a preliminary format which may be amended where appropriate during the design process.

1.5. Ecological constraints

1.5.1. Any works on or around any of the trees or hedges contained within or located outside of the site should bear in mind The Wildlife & Countryside Act 1981 as amended the Countryside and Rights of Way Act 2000. All wild birds are protected by the Wildlife and Countryside Act - 1981, Conservation - Natural Habitats -Regulations 1994 and Countryside Rights of Way Act – 2000. This makes it an offence to intentionally kill, injure, take, possess or trade-in any wild animal listed and prohibits interference with places used for shelter or protection, or intentionally disturbing animals occupying such places. The Bird Breeding season extends from the 1st of March to the 31st of July, as a result, all disturbing activities should be avoided during these times.

1.5.2. All species of Bat and their breeding sites or resting places (roosts) are protected under Regulation 41 of The Conservation of Habitats and Species Regulations 2010 and Section 9 of the Wildlife and Countryside Act 1981. It is an offence for anyone intentionally to kill, injure or handle a Bat, to possess a Bat (whether live or dead), disturb a roosting Bat, or sell or offer a Bat for sale without a licence. It is also an offence to damage, destroy or obstruct access to any place used by Bats for shelter, whether they are present or not.

1.5.3. These issues are outside of my area of experience and separate advice from a suitably qualified ecologist should be sought in the instance that any of these constraints apply to this site.

1.6. Qualifications and experience

1.6.1. The conclusions and recommendations contained in this report are formed from my own site observation and the provided information. The opinions expressed within it are based on my Arboricultural experience. My qualifications and experience in arboriculture are included in Section 5 at the end of this document.

2. Site and proposal

2.1. Site visit

2.1.1. I undertook a site visit on the morning of the 23rd November 2023. The purpose of this visit was to conduct a ground-level visual tree assessment survey, recording data and assessing the condition of the tree population, growing at and within the immediate vicinity of the site. Appropriate tree categorisations were applied to each tree and suitable vegetation during this visit. The weather during the visit was clear sunny and bright. Overall, the weather did not pose a significant constraint on the surveying process and most parts of the trees above-ground structures were visible during the survey. No access was gained to adjacent properties. All off site tree measurements were estimated from the property boundary based on what tree structure components can be viewed.

2.2. Site location

2.2.1. The survey site is located at land adjacent to No 6, Emsworth House Close, Emsworth, Hampshire, PO10 7JR.

Conditions	Result
Temperature	08°C
Cloud Cover	0%
Precipitation	0%
Humidity	50%
Wind Speed (Beaufort)	F2

Red line is indicative of site

2.3. Site description

2.3.1. The survey site is located within Emsworth House Close in the town of Emsworth. The site consists of a grassed area bordered to the northeast by hedging. A single two storey dwelling is located to the south of the site where its border is defined by a wooden fence. A block of flats is located a short distance to the north of the site. The site is level and laid to grass. Ground conditions are firm across the site.

2.3.2. A large over mature Common Oak (Quercus robur)[2] tree is growing within an adjacent property located to the northeast of the site. Several smaller trees including Common Ash (Fraxinus excelsior) and Sycamore (Acer pseudoplatanus) are growing beneath the large Oak tree.

2.4. Proposed development

2.4.1. The proposed development consists of the construction of 2, two storey detached dwellings.

[2] Identified as T2 during the survey.

3. Arboricultural Impact Assessment

3.1. Introduction

3.1.1. The purpose of this assessment is to examine the relationship between the proposal and its likely impact on the retained tree population, both at and within an influencing distance of the site. This assessment will also determine whether the proposed works can be conducted without adversely affecting the retained trees in the short and long term. Recommendations and mitigation will be suggested to reduce or remove the potential impact on the retained tree population and assist in the implementation of the proposal in the most arboriculturally acceptable manner.

This assessment will address the following items:
Potential damage arising from mechanical activities such as excavations and demolition.
The installation of services and any trenching required facilitating this.
Future tree growth
Shading
Potential future pressure on the retained tree population.
Health, safety, and seasonal nuisance.

3.2. Tree retention/removal and pruning.

3.2.1. All trees to be retained are set out in Table 1 below. Any trees, hedges and groups required to be removed to facilitate the proposal are set out in Table 2. Any tree, group and hedgerow required to be pruned to facilitate the proposal are set out in Table 3.

Trees, groups, and hedgerows to be retained.

Table 1 – Vegetation to be retained	Category A	Category B	Category C	Category U
Tree No's	N/A	T2	N/A	T1

Trees, groups, and hedgerows to be removed.

Table 2 – Vegetation to be removed	Category A	Category B	Category C	Category U
Tree No's	N/A	N/A	T3 T4 T5	N/A

Trees, groups, and hedgerows to be pruned.

Table 3 – Vegetation to be Pruned/Part removed	Category A	Category B	Category C	Category U
Tree No's	N/A	T2	N/A	N/A

3.2.2. No high-quality (Category-A) trees have been identified as growing at or within an influenceable distance of the proposal. All trees afforded this categorisation should be retained and protected as a high priority throughout the development process.

3.2.3. A single moderate-quality (Category B) Common Oak tree (T2) has been identified as growing within an influencing distance of the site. All trees afforded this categorisation should be retained and protected as a moderate priority throughout the development process. The removal of such trees must only be considered in light of mitigating circumstances or in the event of sufficient replacement planting. No moderate-quality (Category B) trees are required to be removed to facilitate the construction of the proposal. The canopy of the subject tree contains storm damaged limbs which are fractured, severed and suspended over the site. Recommendations have been made within the tree survey schedule to remediate the risk these branches pose by removing them. A further recommendation for pruning the trees canopy has been made to reduce the risk of future failure and to provide sufficient space for development.

3.2.4. Three individual low-quality (Category-C) trees have been identified as growing at or within an influencing distance of the survey site. Category-C trees are those which are considered to be worthy of only limited Arboricultural merit and amenity value due to several factors. These factors include advanced age, the presence of significant biomechanical defects or young trees with a stem diameter less than 150mm. Category-C trees should not be considered for retention where they place a significant constraint on the design and development process. Three low-quality (Category-C) trees are required to be removed to facilitate the construction of the proposal. These trees have been supressed by the large Common Oak tree leading to poor form and biomechanical defects such as compression forks and bifurcated stems.

3.2.5. A single unretainable (Category-U) tree has been identified by the tree survey. All unretainable category trees have significant irremediable structural defects, are in an advanced state of decline or are colonised by known tree pathogens. As a matter of course, Category-U trees should not be a material consideration in the planning process. Category-U trees are shown in red on the accompanying plans found in the appendices of this document. No unretainable (Category-U) trees are required to be removed or pruned in order to facilitate the formation of the proposed development. The subject tree (T1, Common Ash) is located in a neighbouring garden and does not pose a threat or constraint to the development.

3.2.6. I have assessed the tree population and the juxtaposition between the proposed development. This assessment has been made in light of the visual amenity of the site, the condition and form of the trees currently growing at the site, the overall tree character of the area and the health and safety considerations associated with the site's tree population. Considering the points discussed in this section, it is my professional opinion that the arboricultural impact of the proposal on the current tree population is broadly acceptable. No trees are required to be removed or to facilitate the construction of the proposal. Minor tree pruning works have been recommended in light of observable hazards contained within the canopy of the Common Oak tree (T2). Further minor pruning of the subject trees Northwestern canopy have also been recommended to reduce the risk of future failure and to provide sufficient space for construction. These works are proportionate, minimal in nature and will not detract from the tree's overall amenity, form or lead to any long-term biological detriment. Any works, construction activities, parking or access/egress can, or is conducted outside of an influencing distance of the retained trees below ground and above ground components.

3.3. Additional implications arising from the development

3.3.1. Demolition and Construction within the RPA

3.3.1.1. Damage to the rooting system of a tree can have a significant detrimental effect on a trees biological function. Processes such as demolition, mechanical excavations, the movement of machinery and resultant compaction can lead to loss of root system, anaerobic soil conditions and tree instability. The vast majority (90%) of a tree's roots proliferate within the first 600mm of soil, and the majority of a tree's major roots are within the first 3m of the trees stem base, after this point, the tree root system is heavily branching and of a significantly smaller diameter.

3.3.1.2. Clause 5.3.1. of BS5837:2012 states: 'The default position should be that structures are located outside the RPAs of trees to be retained. However, where there is an overriding justification for construction within the RPA, technical solutions might be available to prevent damage to the tree(s).'

3.3.1.3. In order to construct the Proposed Development, there will be new incursions within the RPA the trees as detailed below:

T2 – RPA Incursion = 4.11%[3]

3.3.1.4. In order for the proposal to be constructed in an Arboriculturally acceptable manner and to ensure compliance with the British standards[4] a pile foundation will be employed with a raised ground beam. Provision for a ventilated air space below the proposed extension and above the retained topsoil is to be made. This space will further incorporate an irrigation system redirecting rainfall beneath the foundation and slab of the proposed structure. Further site investigation through hand excavation[5] will be employed to identify the presence and location of major roots. The foundation is to be designed with sufficient tolerance to allow for the movement of piles and cantilevering of ground beams in order to avoid significant damage to tree roots. Further precautions such as the use of the smallest practical pile diameter and piling rig will also be taken into account to reduce the below and above ground risk of mechanical damage to the retained tree population.

3.3.1.5. The formation of the piled foundation for the proposed extension results in an incursion into the theoretical root protection area (RPA) of T2. Due to the great distance from the base of the subject tree, I perceive there to be little likelihood for significant root proliferation from the Oak tree in this area. However, a cautionary approach is to be adopted to minimise any potentially negative impacts associated with activity in this area. The incursion caused by the proposal into the theoretical root protection area of T2 equates to an area of 26.17m^2. The overall theoretical root protection area of T2 is equal to 635.3m^2. Consequently, the overall incursion caused by the proposed extension equates to 4.11% of the trees overall Root Protection Area[6]. The total percentage of new hard surfacing within the Root Protection Areas of both trees is below the 20% threshold as defined by the British Standards[7]. Any excavation in these areas will be conducted in strict accordance with the processes described within the Preliminary Arboricultural Method Statement. The subject trees have normal vitality and are of a species known to tolerate minor changes in their rooting environment.

---

[3] 26.17m^2 X 100 ÷ 635.3m^2 = 4.11%
[4] British Standards (BS) 5837:2012 "Trees in relation to design, demolition, and construction – Recommendations.
[5] Excavation with hand tools to a minimum depth of 600mm.
[6] 80.22^{2}X100÷440.2m^2=18.22%
[7] Section 7.5.3

3.3.1.6. Temporary ground protection[8] has been prescribed to be installed as additional protection to the rooting zone of the trees and associated rhizosphere. In my professional opinion, I perceive there to be a low risk of long-term detriment to the subject tree brought about by excavation and construction in this area. Further details regarding works within the root protection areas of the retained trees can be found in the Preliminary Arboricultural Method Statement.

3.3.2. Movement of construction machinery and staff parking

3.3.2.1. Emsworth House Close will provide sufficient access and parking or contractors during the development process. Provision for staff parking should be provided by the site supervisor and contractor method statement.

3.3.2.2. Supplementary ground protection has been recommended to be installed in areas where the passage of construction machinery is likely to occur, within the theoretical root protection areas of the retained tree population. As long as these protective measures are in situ prior to the commencement of works and delivery of materials to the site, I perceive there to be a low potential for long-term detrimental effects occurring to the retained tree population resulting from the movement of construction machinery at the site.

3.3.2.3. I perceive there to be a low potential for long-term detrimental effects occurring to the retained tree population resulting from the movement of construction machinery or staff parking at the site.

3.4. Tree protection

3.4.1. The methods of demolition and construction may potentially have a detrimental impact on the biological function of the retained tree stock. With this in mind, thorough tree protective measures are required to provide adequate protection to the trees and to avoid potentially harmful incidents. In order to fully comply with BS 5837:2012 and to ensure that the retained tree stock is afforded the highest level of protection throughout the development process, appropriate Tree Protective Fencing is required to be installed in the locations identified in the Tree Protection Plan[9]. The locations of the Tree Protective Fencing are used to define a Construction Exclusion Zone (CEZ). This area is indicated as a blue-lined area on the accompanying Tree Protection Plan. Under no circumstances is any form of construction activity to take place within this area.

3.4.2. The tree protective fencing to be installed in the proximity of T2 has been set back to provide space for the construction of the proposal. This set back is to incorporate temporary ground protection consisting marine ply sheets or precast resin ground protective mats overlaid onto a 150mm thick layer of woodchip. The locations of temporary ground protection can be viewed on the Tree Protection Plan[10] as a solid yellow area. The temporary ground protection is to be pinned in place using ground pins to ensure they remain intact during the construction phase of the proposal. This form of temporary ground protection is only appropriate for use by pedestrians and pedestrian operated plant not exceeding 2 ton in weight.

3.4.3. A 3D cellular confinement system such as Cell Web is to be installed across the site where any significant construction activity, including the movement of site traffic and the installation of pile foundations are to take place. The cellular confinement system will be specific to support the weight

[8] Three-dimensional cellular confinement system (Cellweb).
[9] Q0367\EmsworthHouseClose\TPP_V1 2024
[10] Q0367\EmsworthHouseClose\TPP_V1 2024

of all site traffic without deformation or compacting the soil horizons below it. The location of Tree Protective measures can be viewed on the Tree Protection Plan provided with this document.

3.4.4. A pre-commencement meeting and regular site monitoring will ensure that the proposed works are carried out in a conscientious and arboriculturally acceptable manner.

3.4.5. As long as the prescribed protection methods are correctly installed prior to the commencement of works, I perceive there to be a low risk of long-term detriment to the retained tree population arising from the proposed development. Further details regarding the tree protection measures prescribed for the site can be found in the Preliminary Arboricultural Method Statement section of this report.

3.5. Ground-level changes

3.5.1. Grade changes often occur during construction. Changes to soil heights have the potential to cause significant disturbance to tree roots and may damage their relationship with surrounding soil horizons. Lowering soil heights may lead to root severance and compaction both of which may have severe impacts on a tree's biological function. Increases in soil levels may cause anaerobic soil conditions which impede water permeation and restrict gaseous exchange. This may cause root death and stress to those trees affected.

3.5.2. The overall topography of the site is level, and no significant ground-level changes are proposed for the site. As a result, I do not perceive there to be a constraint arising from ground level changes and the proposal.

3.6. Services

3.6.1. No new services are proposed to be installed within the RPAs of the retained trees growing at the site. There is scope to ensure that all new services and associated excavations can be orientated outside of, and away from any retained tree root protection area at the site. As a result, I do not perceive there to be a constraint arising from the installation of new services at the site.

3.7. The proximity of existing trees to proposed structures.

3.7.1. Direct and indirect impacts of trees

3.7.1.1. Roots do not have the ability to directly damage heavily loaded structures, however, lightly loaded structures such as paths, small garden walls, and driveway surfaces may be disrupted by incremental root growth. I assume that the proposal will be designed and constructed with trees and potential future root growth in mind[11]. I have assessed the location, layout, and composition of the proposal in light of the retained tree population. I consider the juxtaposition between the proposal and the retained trees to maintain appropriate separation. I do not anticipate any potential negative impacts arising from the proposal and its proximity to the retained tree population.

3.7.2. Seasonal nuisance

3.7.2.1. The proposal is located within proximity of the retained tree T2 (Common Oak). Consequently, leaf fall, and seasonal nuisance is likely to be a factor. However, gutter guards and low maintenance gutter systems may be adopted to mitigate any future issues associated with leaf fall at the site. Consequently, I do not consider seasonal nuisance arising from leaf fall to be a constraint on the proposal.

[11] NHBC Part 4 Foundations, Chapter 4.2 Buildings near trees.

3.7.3. Future pressure to prune or fell.

3.7.3.1. There is little evidence to suggest that large numbers of trees are being lost through future pressure to fell or prune from property owners. Trees provide numerous benefits to occupied areas, most of which far outweigh the presumed disadvantages associated with them. An irregular canopy pruning cycle will be required to maintain sufficient separation from the northernmost dwelling and the neighbouring tree. Due to the age and biological condition of the tree, this is likely to be infrequent and limited to the removal of minor new growth. In this instance, the juxtaposition between the proposed development and the retained trees takes into consideration the tree constraints and should not lead to future pressure to fell or prune any of the retained trees. As a result, any future tree pruning works are unlikely to be in excess of what would be considered as general maintenance. Further control over the management of T2 (Common Oak) will be controlled by the LPA through the already present Tree Preservation Order.

3.7.4. Shading, orientation, and windows

3.7.4.1. Both of the proposed two storey detached dwellings are located to the south of the retained trees, primarily T2 (Common Oak). Consequently, both of the proposed dwellings are located far from the shade influence of any of the sites retained trees or other trees growing outside of the site. Consequently, I do not perceive excessive shading to be a constraint on the proposal.

3.7.4.2. Considering climate change in the UK and an annual increase in global heat trends, the presence of trees in close proximity to the rear garden of the proposed dwelling may have many environmental benefits. The British Standards state "Shading can be desirable to reduce glare or excessive solar heating, or to provide for comfort during hot weather. The combination of shading, wind speed/turbulence reduction and evapo-transpiration effects of trees can be utilized in conjunction with the design of buildings and spaces to provide local microclimatic benefits".

3.8. Conclusion

3.8.1. The proposal does require the removal of three low-quality trees. These trees have impaired form and are suppressed by the canopy of T2 (Common Oak). The removal of these trees will improve the appearance of T2 (Common Oak) whilst not impacting the sites tree character. The amenity of the wider landscape will not significantly change as a result of the proposal.

3.8.2. Minor canopy pruning is required to facilitate the construction of the proposal and to safeguard the trees from mechanical damage. Where this pruning has been prescribed it has been limited to the southwestern portions of the trees canopy leaving the majority of the canopy untouched. Such pruning works are unlikely to lead to any long-term detrimental effects to tree health.

3.8.3. Construction within the theoretical root protection areas of one tree[12] is required for the formation of the proposal's foundation. In order that this can be achieved in an arboriculturally acceptable manner and to reduce any potentially negative impacts, piles are to be inserted in replace of traditional strip foundations. Ground beams may then be formed at or close to the existing topsoil surface on to which the structure can be formed. Provision is to be made to redirect rainfall beneath the structure and a ventilated void will maintain gaseous exchange beneath the proposal.

3.8.4. Significant tree protection is to be installed prior to the commencement of works at the site. In this instance temporary tree protective fencing, temporary ground protection and a 3D cellular

[12] T2.

confinement system is to be employed to protect both the above ground structures of the retained tree population and the below ground environment at the site. Such supplementary protection will be specific for the site's requirements and sufficient to support the movement of traffic across the site during the development process.

3.8.5. The juxtaposition between the proposed development and the retained tree population maintains adequate separation. I have assessed the probability of future tree root growth and seasonal nuisance. In my professional opinion do not perceive either of these to be a constraint on the proposal.

3.8.6. The site poses a nominal number of tree related considerations which have been individually appraised as part of this assessment. The biological condition of trees, suitability of design, location, likely impact, tree protection and the future relationship of the site in relation to its retained tree population have all been carefully considered and taken into account. As long as the methodologies described, tree protective measures and specialist foundations are all employed under regular and consummate Arboricultural supervision, I perceive there to be a low potential for long term negative impacts to the retained trees arising from the development of the proposal.

07564346560
Oliver@fallenandfound.co.uk
www.fallenandfound.co.uk

2
Selsdon Avenue
Romsey
Hampshire
SO51 7PL

Fallen&Found Arboriculture Ltd

Company No: 11872391 / VAT Registration 317617696

Preliminary Arboricultural Method Statement

Land adjacent to No 6, Emsworth House Close, Emsworth, Hampshire, PO10 7JR.

Dated

Sunday, 04 February 2024

To be displayed prominently on-site and brought to the attention of all employees, contractors and sub-contractors.

This document is to be used in conjunction with the following documents:

BS 5837:2012 Tree Survey Schedule
Tree Plan ref: Q0367\EmsworthHouseClose\TPP_V1 2024

Note:
After approval from the Local Planning Authority, this Arboricultural Method Statement becomes an official document. Consequently, the methodologies prescribed within it must be conducted as stated and carried out to their fullest extent as described. A copy must be retained by the Site Supervisor for reference and made available at all times for employees, staff and sub-contractors.

1. Summary

The purpose of this method statement is to safeguard retained trees and their below and above ground structures. The recommendations made in this report aim to guide the construction process in areas near to, or within the root protection areas of retained trees. The second purpose of this method statement is to minimise the impact of construction activity on the tree population retained on site. The excavations made for the construction of foundations on any site where trees are present may lead to the damage and removal of roots. Any form of damage or root loss should be avoided where possible. Where the likelihood of this is high, a methodology of construction which minimises the impact of root damage/loss is required to be followed.

This Arboricultural Method Statement has been constructed in accordance with BS 5837:2012 **"**Trees in relation to design, demolition and construction **–** Recommendations**."** Further guidance has been taken from the following documents:

BS 3998:2010 **"**Tree Work **–** Recommendations**."**
National Joint Utilities Group **"**Guidelines for the planning, installation and maintenance of utility services in proximity to trees, 1995**."**
Trees in Hard Landscapes: A Guide for Delivery.
Trees in Focus, APN12, Through Trees to Development
BS 8545:2014 Trees: from nursery to independence in the landscape-Recommendations.
Trees & Design Action Group, Trees, Planning and Development: A Guide for Delivery.

2. Site-specific considerations

All construction activity must be excluded from the root protection areas of the retained trees. Unless specified in detail within this document. The root protection area of each retained tree is outlined as a Grey Hatched dodecagon as indicated on the accompanying plans. A Construction Exclusion Zone (CEZ) marked as a blue striped area has been defined and displayed on the accompanying Tree Protection Plan. No form of activity is to take place within this zone during the demolition or construction phases of the proposal.

All agreed tree works and tree protective measures must be conducted and in situ prior to the commencement of the development process including the delivery of materials to the site. Full details regarding the extent of each tree root protection area can be found in the Tree Survey Schedule section provided in Appendix A of this document. Details regarding the prescribed tree works may also be found in the same section. Initial access to the site can be achieved via the pre-existing access driveway and access gate. No heavy machinery including dumpers, excavators or tracked vehicles is to enter the site during the tree works phase. Arisings can be removed from the site by hand and with wheeled vehicles. These vehicles must not operate within the root protection areas of the retained trees.

3. Sequencing, monitoring, and supervision

In order to ensure that the tree protection measures and methodologies prescribed by this method statement are conformed to, it is my recommendation that a series of monitoring intervals and regular site visits be established. All works which have the potential to harm trees may require Arboricultural supervision. Regular site visits will be recorded by the Arboricultural Consultant, a copy of the site inspection form can be found in Appendix C, Figure 4. Recorded site visits will be attached to the AMS and remain available for inspection during the construction process. In my opinion, the following events listed below require Arboricultural supervision and should be conducted in the following order:

Event	Supervision	Reason
Pre-commencement meeting	Arboricultural Consultant, Contractor, Client and LPA representative	To agree on tree works, protective measures and any other site constraints
Conduct agreed tree works.	Arboricultural Consultant and Tree Works Contractor.	To ensure tree works are carried out in strict accordance with specification under LPA agreement.
Erection and installation of Tree Protection Fencing (CEZ[13])	Arboricultural Consultant and Contractor	To ensure correct instalment in prescribed locations. To sign off work and inform LPA.
Installation of temporary ground protection	Arboricultural Consultant and Contractor	To ensure correct instalment in prescribed locations. To sign off work and inform LPA.
Hand digging and exploration of pile locations	Arboricultural Consultant and Contractor	To assess each site for the presence of roots in excess of 2.5cm and relocate pile location if necessary.
Installation of 3D cellular confinement system	Arboricultural Consultant and Contractor	To ensure correct instalment in prescribed locations. To sign off work and inform LPA.
Installation of piles and ground beams	Arboricultural Consultant and Contractor	To ensure an arboriculturally sensitive/acceptable approach to the works is maintained. To sign off work and inform LPA.
Main Construction Process	Arboricultural Consultant and Contractor	To ensure all potentially sensitive site operations are conducted in an arboriculturally sensitive manner. To sign off work and inform LPA.

3.1. Auditing and inspection regime

An inspection regime or schedule of monitoring should be agreed upon during the pre-commencement meeting between the Arboricultural Consultant, LPA Representative, Contractor, and Client. A detailed record of site visits and monitoring during sensitive site operations shall be collated

[13] Construction exclusion zone

using the Arboricultural Consultant Site Visit Form included in Appendix C, Figure 5. The AC site visit form will be used to inform the LPA after every site visit and throughout the development.

4. Sequenced methods of construction and tree protection

4.1. Pre-commencement meeting

Arboricultural supervision required.

An onsite meeting will be held, attendees will include all relevant parties. Parties should include the appointed Arboricultural Consultant, the developer and local planning authority representative. The purpose of the site meeting is to agree on the formalities of the proposal, agree on tree works, the location of access both permanent and temporary, site storage locations, the location of tree protection barriers, time schedules and any other Arboricultural constraints the site may pose.

4.2. Conduct agreed tree works.

Arboricultural supervision required

A detailed schedule of the prescribed tree works associated with the site can be found in the accompanying Tree Survey Schedule, Appendix A. All tree works should be conducted by a fully qualified and insured Arboricultural contractor conforming to BS 3998: 2010 "Tree Work – Recommendations." The contractor should prepare and fill out all necessary Site-Specific Risk Assessments and Method Statements appropriate for the task/tasks and adhere to current health and safety standards. A list of Arboricultural Association approved contractors can be found on their website www.trees.org.uk.

All contractors should implement appropriate Biosecurity measures. The Arboricultural Associations, Application of Biosecurity in Arboriculture, Guidance Note 2[14] provides guidance on the responsibilities of Tree Work Contractors. All arisings should be processed and removed from the site. All removed arisings should be disposed of in an environmentally sensitive manner.

The locations and individual identification numbers for each tree included within the tree survey conducted at the site can be found in the Tree Survey Schedule contained within Appendix A of this document. The southwestern portion of the trees canopy is to be pruned. This area can be viewed on the accompanying plan where it is highlighted in green stripes. All trees to be removed are clearly identified in red on the same plan[15]. A copy of the tree survey schedule and Tree Protection Plan (Q0367\EmsworthHouseClose\TPP_V1 2024) should be provided to the appointed Tree Contractor by the Site Supervisor.

At no point may any part of a retained tree be cut or pruned by staff, contractors, or sub-contractors.

[14] https://www.trees.org.uk/Help-Advice/Biosecurity
[15] Tree Protection Plan Q0367\EmsworthHouseClose\TPP_V1 2024

4.3. Tree Protection

Arboricultural supervision required

Tree protective measures must be installed prior to:
Site and ground clearance
The delivery of materials and plant to the site.
Grading of soil heights
Demolition of existing structures or the removal of hard surfacing.
Construction in any form.
The installation of services or drainage.
Landscaping works.

4.3.1. Form

Tree protection barriers are to be erected in the locations specified in the Tree Protection Plan (Q0367\EmsworthHouseClose\TPP_V1 2024) provided in Appendix B of this document. The protection barriers will conform to the guidelines set in BS 5837:2012 "Trees in relation to design, demolition and construction – Recommendations. The tree protective barrier fences will consist of weld mesh panels affixed to a braced vertical and horizontal scaffold framework as indicated in Appendix C, (Figure 1) of this document. A supplementary layer of netting should be attached to the outside of the tree protective barriers to inhibit spoil or other material passing through the weld mesh panels and into the protected rooting zones of the trees. All-weather warning signs such as those in Appendix C, (Figure 3) are to be placed upon the fencing every 10m. The purpose of these signs is to inform staff and contractors as to the purpose of the tree protective barriers.

Temporary ground protection shall be installed in the locations specified in the accompanying Tree Protection Plan[16] in the areas indicated (solid Yellow). A layer of geotextile will be first laid onto the existing ground surface and pegged in place using small pins. A 150mm deep layer of woodchip will be spread evenly over the geotextile material by hand using wheelbarrows and a rake. On to the woodchip layer, a series of interlinked pre-cast resin boards or 20mm thick ply boards shall be joined together and affixed to the ground using steel pins. An example diagram and photographs of the installed ground protection is provided in Appendix C (Figure 4). The purpose of the ground protection is to provide safe passage of construction traffic across the Root Protection Areas of the trees without distorting or causing compaction of the underlying soil horizons. This form of ground protection is only suitable for the following instances: "for pedestrian operated plant up to a gross weight of 2t".

4.3.2. Location

The locations of the tree protective barriers and temporary ground protection are indicated on the accompanying Tree Protection Plan (Q0367\EmsworthHouseClose\TPP_V1 2024) provided in Appendix B of this document. The locations of tree protective measures should be assessed in light of potential underground services. I have made no assessment of potential underground services in the proximity of the prescribed tree protective measures. The presence of underground utilities should be ascertained by the contractor prior to the installation of the tree protective measures.

In the instance that underground services are present in the locations where the tree protective measures have been prescribed the alternative Tree Protective Fence specification found in Appendix C, Figure 2 should be used. The alternative Tree Protective Fencing should be incorporated into the

[16] Q0187\Dunford\TPP_2022_V1

default fencing and secured at either end. In certain circumstances, it may be appropriate to incorporate site boundary fences, hoarding or temporary site offices. This must be confirmed with the LPA and be installed/removed without causing damage to the retained trees.

4.3.3. Setting out

The setting out of tree protective fencing should be conducted by the contractor and Arboricultural Consultant. Its position is to be demarked using biodegradable marker paint according to the dimensions specified in the tree survey schedule. Erection of all tree protective measures will take place prior to any works other than the prescribed tree works occurring. This includes demolition and delivery of materials, plant, or equipment. Once erected, all tree protective measures are to be treated as Sacrosanct and under NO circumstances moved without consulting the Arboricultural Consultant and the notification of the Local Planning Authority. Any alteration to any form of tree protective measures utilised at the site throughout the entire development process will first require the written permission of the LPA.

4.3.4. LPA Involvement

The Local Planning Authority should be informed by the appointed Arboricultural Consultant of installation and construction of the tree protective measures once they are in situ and prior to the commencement of any development activities at the site.

4.3.5. Construction Exclusion Zone

The Construction Exclusion Zone is identified as a blue striped area in the accompanying Tree Protection Plan (Q0367\EmsworthHouseClose\TPP_V1 2024) provided in Appendix B of this document. The purpose of this zone is to ensure that the protected trees and their rooting zones remain undamaged throughout the development process. The tree protective measures prescribed within this report and detailed in the accompanying Tree Protection Plan must be installed and remain in situ until all construction activity at the site is complete. This includes all landscaping and associated operations.

4.3.6. Prohibitions

The following activities must NOT be allowed to occur inside of the Construction Exclusion Zone:
The raising or lowering of soil levels.
The positioning of machinery of any size, unless temporary ground protection has been installed, approved, and recommended within this Arboricultural Method Statement or previously agreed by the appointed Arboricultural Consultant and LPA.
Mechanical excavations of any kind
Excavations conducted by hand (unless specifically approved within this Arboricultural Method Statement).
The construction of foundations (unless specifically approved within this Arboricultural Method Statement).
Excavations for the installation of services including drainage or conduits (unless specifically approved within this Arboricultural Method Statement).
The storage of plant, machinery, or tools unless temporary ground protection has been installed.
The storage of spoil unless temporary ground protection has been installed.
Vehicular access unless temporary ground protection has been installed.
The mixing of materials, spillage or discharge of chemicals or harmful substances.
Fires where unavoidable must be positioned outside of root protection areas and so that they cannot conduct heat on to the above-ground structures of the retained trees.

Signs, service cables or other items will not be attached to any part of any tree being retained.

4.4. Hand digging of pile locations

Arboricultural supervision required

The locations of each pile required for the formation of the foundation of the extensions shall be located and marked by the piling contractor and the project Arboricultural consultant (AC). Each position shall be marked with biodegradable marker paint prior to the installation of temporary ground protection at the site. The first 600mm of topsoil shall be excavated by hand using hand tools or air displacement technology. All roots under250mm diameter may be pruned back to the hole edge using a sharp set of bypass secateurs. The presence of roots in excess of 250mm will be retained with the location of the pile moved in favour of severance or damage. The design of the pile foundation shall be made with sufficient tolerance to allow for the movement of piles and cantilevering of ground beams where necessary. Once each Pile site has been assessed it shall be marked using a track pin driven into the whole and capped with a red safety cap to demark its location.

4.5. Installation of no-dig cellular confinement system

Arboricultural supervision required

In order to safeguard the soil horizons and tree roots contained within a no-dig 3D cellular confinement system is to be used. The installation of products varies slightly and should be installed according to manufacturer's instructions. In principle, the product should be installed in the following way.

No machinery or powered tools are to be used at any stage during the setting out of the cellular confinement system. All uneven ground is to be made up using appropriate no fines aggregate without the need for compaction or excavation unless prior agreed in writing by the LPA. In the instance that some excavation is required, the project Arboricultural consultant must be informed immediately.

A layer of permeable geotextile will be laid out over the area where the cellular confinement system is to be installed[17]. Provision should be made for a 300mm overlap of the geotextile around the edge of the confinement system. The cellular confinement system is then stretched out across the whole area to be protected and pinned in place. The cells of the system are then filled using 40/20mm clean angular stone which is free of fines and Lime. No compaction of this subbase is required. Care must be taken to spread the confinement system whilst respecting the locations of each pre hand dug pile hole. These areas will not be filled with angular stone but rather trimmed back using a sharp knife providing access to the exposed soil below.

Filing of the cellular confinement system should take place working backwards from the initial point of installation using either hand tools or spread by a small excavator. At no point is the excavator to enter the unprotected ground and should be monitored by a banks man. Edge retainers should be installed without the requirement for excavation. Suitable edge supports may consist of the following materials: Railway sleepers pinned into the ground or wooden boards affixed in the same manner. Any disparity between soil heights may be made up using a temporary concrete or earth batter. Concrete must be laid onto an impermeable membrane with a minimum thickness of 250 microns rather than the soil. Butyl liner is an acceptable material for this purpose.

[17] Indicated as a transparent yellow area on the Tree Protection Plan (Q0145\Skylark\TPP\2021_V2).

4.3. Installation of piles and ground beams

Arboricultural supervision required

The installation of each pile will be undertaken by the piling contractor within the predefined holes as previously hand excavated and vetted by the project AC. The smallest possible pilling rig and pile size will be used as specified by the project structural engineer. The operators and machine may only operate from the protected ground outside of the Construction Exclusion Zone or where there is no impinghement upon the Root Protection Areas of the retained trees.

After the installation of each pile is complete a series of interlocking ground beams may be installed. The 3D cellular confinement system my be systematically removed by hand to facilitate the installtion of the ground beams. Once installed, the floor may then be cast upon the ground beams retaining a void beneath to maintain gaseous exchange and to house an irrigation system.

All ground protection unless required to be removed prior to the casting of the floor and installtion of the ground beams is to remain in situ throughout the development process.

4.6. Staff parking, storage of materials and chemical mixing

Site parking for contractors, staff and visitors should be set out in the contractor's contingency plan. Any areas used for such purposes must be located outside of the root protection areas of the retained tree population or on a suitably protected ground. Provision should be made by the main contractor for dealing with vehicle spillages i.e., the use of spill response kits or protective bunding. All areas used for the storage of materials including cement, fuels, bitumen, paint, plaster, timber, machinery etc and any other hazardous materials are to be located a minimum distance of 10m from any tree root protection area at all times. A precautionary bund consisting of an earth bund lined with a heavy-duty plastic liner is sufficient to prevent contamination of RPA's and surrounding soil horizons.

4.7. Main construction process

The site manager will be responsible for informing all staff, contractors, sub-contractors, and visitors as to the importance and locations of the retained trees located at the site.

A normal method of construction can be adopted across the site where there is no impingement on tree root protection areas. These areas have been plotted on the accompanying plans found in Appendix B of this document. The accompanying Tree Survey Schedule contains information on the dimensions of each tree's root protection area.

The site manager will instruct the appointed Arboricultural Consultant to attend site during any potentially arboriculturally sensitive events. The tree protective measures and locations of storage materials including areas used for the mixing of chemicals will be checked regularly regarding the site's general operation.

All tree protective measures including barriers and ground protection must remain in situ in an unaltered condition unless written approval has been provided by the LPA.

Where scaffolding is to be erected close to a retained tree(s) it must be conducted after the consultation of the appointed Arboricultural Consultant and installed as per his/her advice. Once in situ its construction and location shall be recorded photographically and used to inform the LPA where potential tree-related conflicts arise. As the location of scaffolding is not yet confirmed, this process

of monitoring will reduce the potential for tree-related harm and maintain an informed relationship between the project and LPA.

Fires on the site will be avoided unless absolutely necessary. Where fires are unavoidable, they should be positioned where heat cannot conduct onto nearby trees and affect their foliage, rooting environment, or structures. All fires should be attended at all times and extinguished before being left.

A 10m separation between any tree retained at the site during the mixing of cement. This 10m separation shall also be maintained between storage areas containing cement or other potentially harmful substances such as fuels, tar, oil, builders' sand, and cement washings.

Care should be taken when planning site operations in close proximity to trees. This includes the passage of machinery and the lifting of objects and materials. The appointed arboriculturist should be informed when potentially harmful operations are likely to occur during the construction process. A banks man should be employed to monitor excavations and ensure that mechanical damage does not occur to trees or protective barriers. In the instance that tree protective measures, including fencing and ground protection, are damaged at any point during construction activity, the Arboricultural Consultant must be informed immediately. Repairs to damaged tree protective measures must take place immediately under the supervision of the project Arboricultural Consultant.

At no point may any part of a retained tree be cut or pruned by staff, contractors, or sub-contractors.

4.8. Construction of services

All utilities and underground services must be orientated outside of construction exclusion zones and away from tree root protection areas. Where installation within root protection areas is unavoidable, it must be conducted in accordance with the guidelines prescribed in NJUG Volume 4 Guidelines for the planning, installation and maintenance of utility apparatus in proximity to trees and under the supervision of the appointed Arboricultural Consultant after the Local Authority Tree Officer has been notified. A contractor's guide to the excavation of services around trees can be found at the following address: https://njug.org.uk/wp-content/uploads/2016/09/V4-Trees-Issue-2-16-11-2007.pdf.

Any incursion into the root protection area of retained trees for any purpose must be brought to the attention of the appointed project Arboricultural Consultant and Local Authority Tree officer as soon as possible. Where trenching within the root protection area of any tree, it should be conducted using air displacement technology[18] or by hand digging. Suitable hand digging tools include narrow spades, a post hole digger, fork and trowel. Hand digging is time-consuming and hard work. Consequently, Air Displacement technology should be used as a preference.

Hand digging shall be executed with a high level of care ensuring that tree roots are neither severed nor damaged. Roots with a diameter smaller than 25mm may be severed using a SHARP set of bypass secateurs. Roots with a diameter greater than 25mm must not be severed without the consultation of the appointed Arboricultural Consultant. Tree roots with a diameter greater than 25mm should be worked around and protected once they have been exposed. A covering consisting of damp hessian

[18] Airspade

should be placed around exposed tree roots to reduce the chance of them becoming dried out. Any protective coverings should be removed prior to the backfilling of any trenches.

Trenches should be backfilled carefully using a 50/50 mix of topsoil and sharp sand. Builder's sand should NOT be used due to its high sodium content. This mix should be placed into the trench using hand tools and gently firmed into place. The trench should be filled to the point of being proud of the original ground height, this will allow for natural settlement. Any disparity between original soil heights and trench fill should be made up with supplementary trench fill at a later date.

4.9. Erection of boundary fences

The installation of domestic fencing was required within the CEZ, once barriers have been removed shall be conducted by hand. The route of the fencing shall be marked on the ground using biodegradable marker paint or string line. No posts are to be installed within 1m of any retained tree stem.

All post holes will be dug by hand ensuring that they remain the minimal size practicable (10%) larger than the posts being inserted. All postholes within root protection areas are to be excavated by hand using hand tools and lined with an impermeable liner prior to the pouring of concrete.

Fencing must consider the location of the trees and likely morphology of tree root structure. Fencing should deviate or bridge where necessary to ensure an appropriate distance is maintained from neighbouring trees.

All posts shall be installed and back rammed using the excavated soil to secure them. All rails shall be brought onto the site by hand and affixed to the posts during the works. No storage of fencing materials is to take place during the works.

4.10. Soft landscaping and new planting

Before the start of construction, it is advisable to set aside areas where new planting is proposed. These areas can then be protected to ensure that the soil horizon into which the new planting is established is not compacted. Areas, where soil compaction has taken place but are proposed for replanting, will require soil amelioration prior to planting. Soil decompaction using soil displacement technology such as Air spading will be necessary to improve the rooting environment of new trees and shrubs prior to their planting.

The deep cultivation of soil within the tree root protection area must be avoided unless conducted carefully by hand. Machines such as rotavators are NOT to be used for the cultivation of soil in close proximity, or within tree root protection areas.

Herbicides used for the killing of unwanted herb layer should be appropriate for their intended use and applied by a fully qualified contractor taking special care not to spray or damage any of the retained trees. Dead vegetation should be removed carefully by hand without the use of machinery. No penetration of the soil below the unwanted vegetation may occur during this process.

New beds and areas of new planting should in principle be mulched using a 100mm deep well-composted organic woodchip mulch. This layer will reduce weed growth and retain moisture for new planting.

Mulch layers should be topped up accordingly to always maintain an effective thickness of 100mm. No irrigation or drainage pipes are to be installed within the root protection areas of the retained trees.

New tree planting should be carried out in strict accordance with BS 8545:2014 Trees: from nursery to independence in the landscape-Recommendations. Appropriate support measure should be employed for all new trees at the site. This should also conform to the specification contained within BS 8545:2014. All new tree planting should be subject to a minimum of a two-year aftercare plan to ensure the successful establishment of new trees.

4.11. Amendments

Due to the nature of development issues sometimes arise which may require the amendment of previously agreed tree protection details or methods of working. In this instance, any alterations must be discussed with the appointed Arboricultural Consultant and approved in writing by the LPA prior to being implemented. Copies of amendments must be retained and attached to the site copy of the AMS as a definitive record of what has been agreed.

4.12. Communication details, monitoring & compliance.

All relevant parties will be informed as to any amendments to the design or proceedings throughout the duration of the project.
Arboricultural Consultant: Oliver Lower | Fallen&Found Arboriculture Ltd
Tel: 07564346560
Email: oliver@fallenandfound.co.uk
Local Planning Authority: Havant Borough Council
Tree Officer: Kevin Peters
Tel: 02392 446015
Email: treeofficer@havant.gov.org

An Arboricultural Consultant should be retained during the entire development process. Their roles will be as follows:
Supervision by an Arboricultural Consultant is to take place during any excavation near to any retained trees or in proximity to existing RPA's.
Weekly site inspection should take place and include monitoring of tree protection fencing, ground protection measures and Construction Exclusion Zones. Site visit times will be recorded using the form provided. Appendix C, Figure 5.
Photograph the site and the protection methods employed in order to inform the LPA that works are being conducted in accordance with the methodology prescribe within this report.

Appendix A

Tree Survey Schedule

BS5837:2012 Tree Survey

Client: Futuristic Home Developments
Project: Q0367 Emsworth House Close 2023
Survey Date: 23/11/2023
Surveyor: Oliver Lower

Fallen&Found Arboriculture Ltd
34
Havant Road
Emsworth
Hampshire
PO10 7JG
Phone: 01243 967808

Tree and Tag No / Species	Hght (m)	Stems No	Stems Ø (mm)	Crown Spread (m)	Crown Clear (m)	Age	RP A (m²) R (m)	Phys Condition	Structural Condition	Preliminary Recommendations / Survey Comment	Cat ERC
G1 N/Q										Estimated Measurements	
A Group	5	1	72	N	1		A: 2.3	Poor	C: Poor	Protection :: Erect protection barriers	C.2
- -				E	1		R: 0.85		S: Poor	*Erect tree protection barriers as per specification.*	10 to 20 yrs
				S	1				B: Fair	A linear Laurel hedge.	
				W	1						
T1 N/A										Estimated Measurements	
Common Ash	9.8	1	660	N	3	OM	A: 197.1	Poor	C: Poor		U
Fraxinus excelsior				E	8		R: 7.92		S: Poor	A decayed Ash tree located on adjacent property.	<10 yrs
				S	3				B: Poor		
				W	2.5	5					

Age Classifications: N Newly planted; EM Early Mature; Y Young; M Mature; SM Semi-mature; OM Over Mature

Condition: C Crown; S Stem; B Basal area

Stems: Ø Diameter; (Eq) Equivalent stem diameter using BS5837:2012 definition

ERC: Estimated Remaining Contributio

Tree and Tag No / Species	Hght (m)	Stems No	Stems Ø (mm)	Crown Spread (m)	Crown Clear (m)	Age	RP A (m2) R (m)	Phys Condition	Structural Condition	Preliminary Recommendations / Survey Comment	Cat ERC
T2 N/A										Estimated Measurements	
Common Oak *Quercus robur*	24.3	1	1185	N 9.5 E 7 S 10 W 10.44	10 9 8 5	OM	A: 635.3 R: 14.22	Fair	C: Good S: Poor B: Fair	Reduce lateral limbs :: By 2.5m to shape *Prune southwestern canopy as prescribed to provide sufficient space for construction.* Raise low canopy :: To 6.0m *Raise western and southwestern canopy only to provide seperation from dwelling and to provide sufficient space for construction.* Remove :: Suspended or broken branches Protection :: Erect protection barriers *Erect protection barriers as per specification.* Protection :: Construct ground protection *Install temporary ground protetion as per specification.* A large Oak tree. Prune western canopy only by prescribed amount. Raise western canopy as directed. Remove large snapped hanging branches in western canopy at 6m and 21m above ground level overhanging site. Canopy clean western canopy.	B.1.2 20 to 40 yrs
T3 N/A											
Sycamore *Acer pseudoplatanus*	12	1	250	N 2 E 3 S 4 W 1.2	4 4 2 2	SM	A: 28.3 R: 3	Fair	C: Fair S: Fair B: Fair	Fell :: Fell and treat stump(s) *Remove tree and treat stump with eco-plugs.* Tree suppressed by large Oak. Bifurcated stem.	C 10 to 20 yrs
T4 N/A											
Sycamore *Acer pseudoplatanus*	20	1	390	N 5 E 1 S 4 W 7	4 8 7 4	M	A: 68.8 R: 4.67	Fair	C: Fair S: Fair B: Fair	Fell :: Fell and treat stump(s) *Remove tree and treat stump with eco-plugs.* A leaning tree with westerly biased canopy. Suppressed by adjacent Oak.	C.2 10 to 20 yrs
T5 N/A											
Common Ash *Fraxinus excelsior*	16	1	230	N 3 E 2 S 3.5 W 4		SM	A: 23.9 R: 2.75	Fair	C: Fair S: Fair B: Fair	Fell :: Fell and treat stump(s) *Remove tree and treat stumps with eco-plugs.* A small Ash tree.	C.2 10 to 20 yrs

Age Classifications: N Newly planted; EM Early Mature; Y Young; M Mature; SM Semi-mature; OM Over Mature

Condition: C Crown; S Stem; B Basal area

Stems: Ø Diameter; (Eq) Equivalent stem diameter using BS5837:2012 definition

ERC: Estimated Remaining Contributio

Appendix B

Tree Protection Plan (Q0367\EmsworthHouseClose\TPP_V1 2024)

Fallen&Found Arboriculture Ltd
34 Havant Road, Emsworth,
Hampshire PO10 7JG
Tel: 01243967808
Email: Oliver@fallenandfound.co.uk

Emsworth House Close
Tree Protection Plan V1

SCALE : 1 : 100 @ A1	DATE : 04/02/2024	
MAP FILENAME : Q0367\EmsworthHouseClose\TPP_V1 2024		

Map data shown may contain Ordnance Survey ® products supplied by
Pear Technology Services Ltd; Email: info@peartechnology.co.uk
© Crown Copyright and database rights from date shown above
Ordnance Survey ® licence number 100023148

Appendix C

Figure 1

Default Tree Protective Fencing

Protective fencing should be erected before any construction commences on site. It should also be in position to protect important trees prior to demolition.

Protective fencing should stay in position until all construction activity has finished.

'Barriers should be fit for the purpose of excluding construction activity and appropriate to the degree and proximity of work taking place around retained trees. On all sites, special attention should be paid to ensuring that barriers remain rigid and complete.' BS 5837 para 9.2.1.

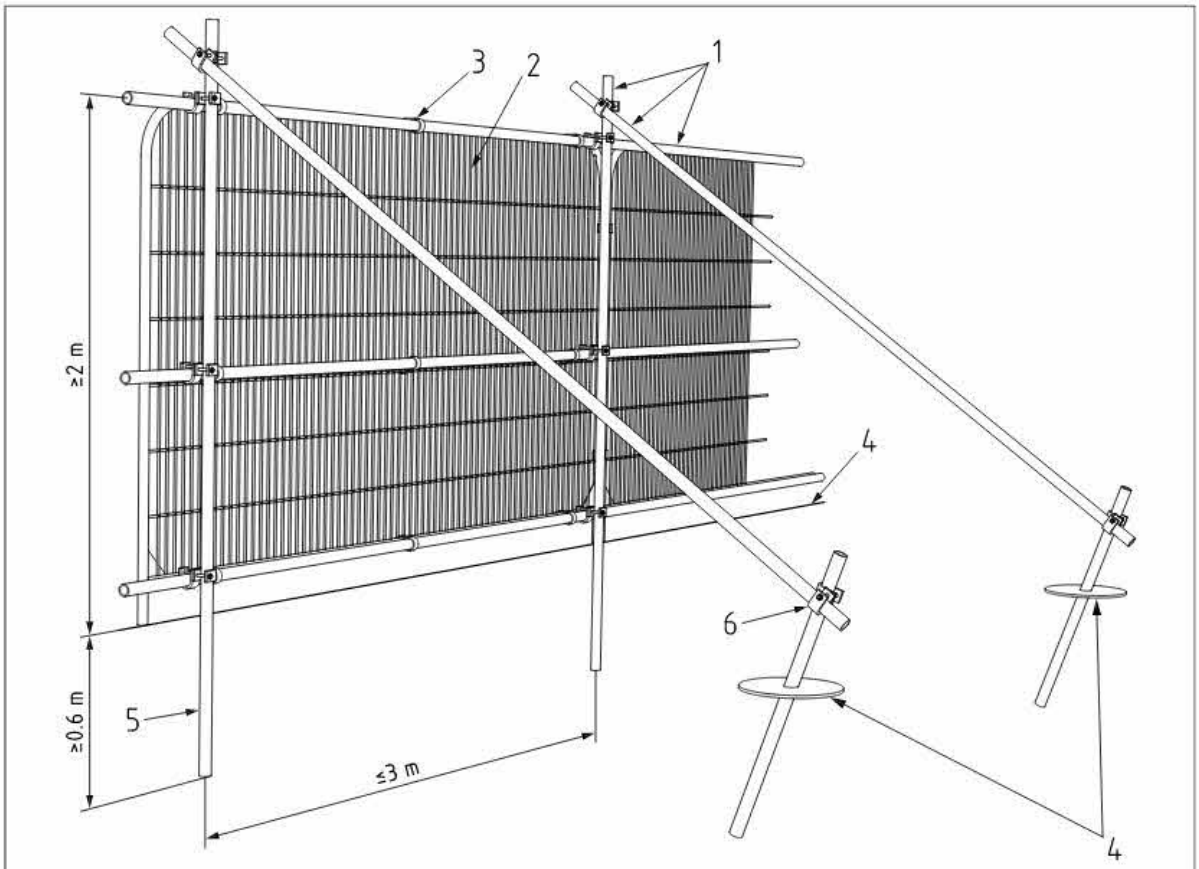

Key

1 Standard scaffold poles
2 Heavy gauge 2 m tall galvanized tube and welded mesh infill panels
3 Panels secured to uprights and cross-members with wire ties
4 Ground level
5 Uprights driven into the ground until secure (minimum depth 0.6 m)
6 Standard scaffold clamps

Figure 2

Alternative Tree Protective Fencing

This form of tree protective barrier should be used only when significant underground constraints warrant its use. However, it should be treated in the same manner as the default tree protective barrier displayed in Figure 1.

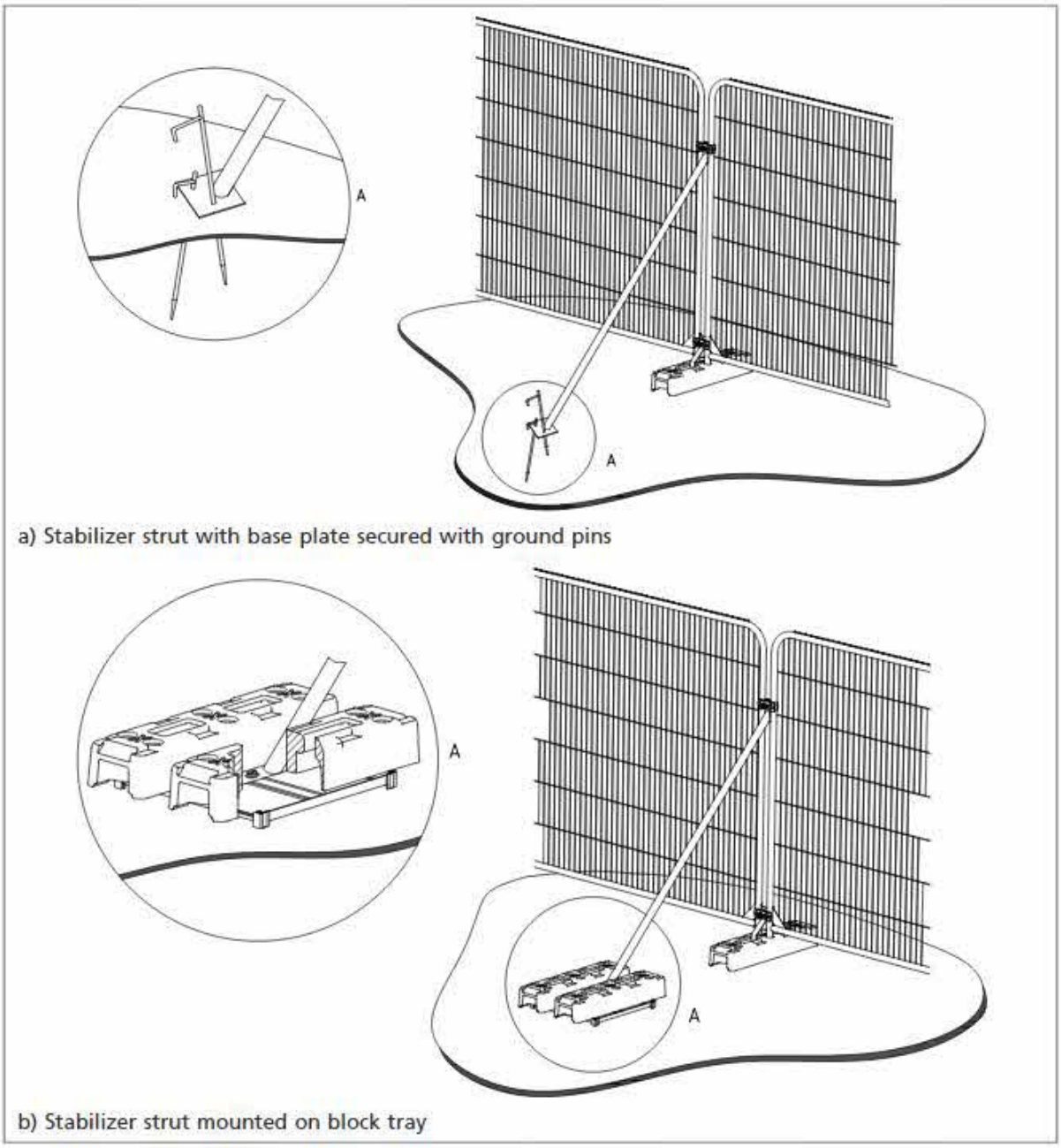

04/02/2024

Figure 3

Ground Protection

Sketch plan of set background protection affixed to the ground using pins suitable for machinery NOT exceeding 2 tonnes.

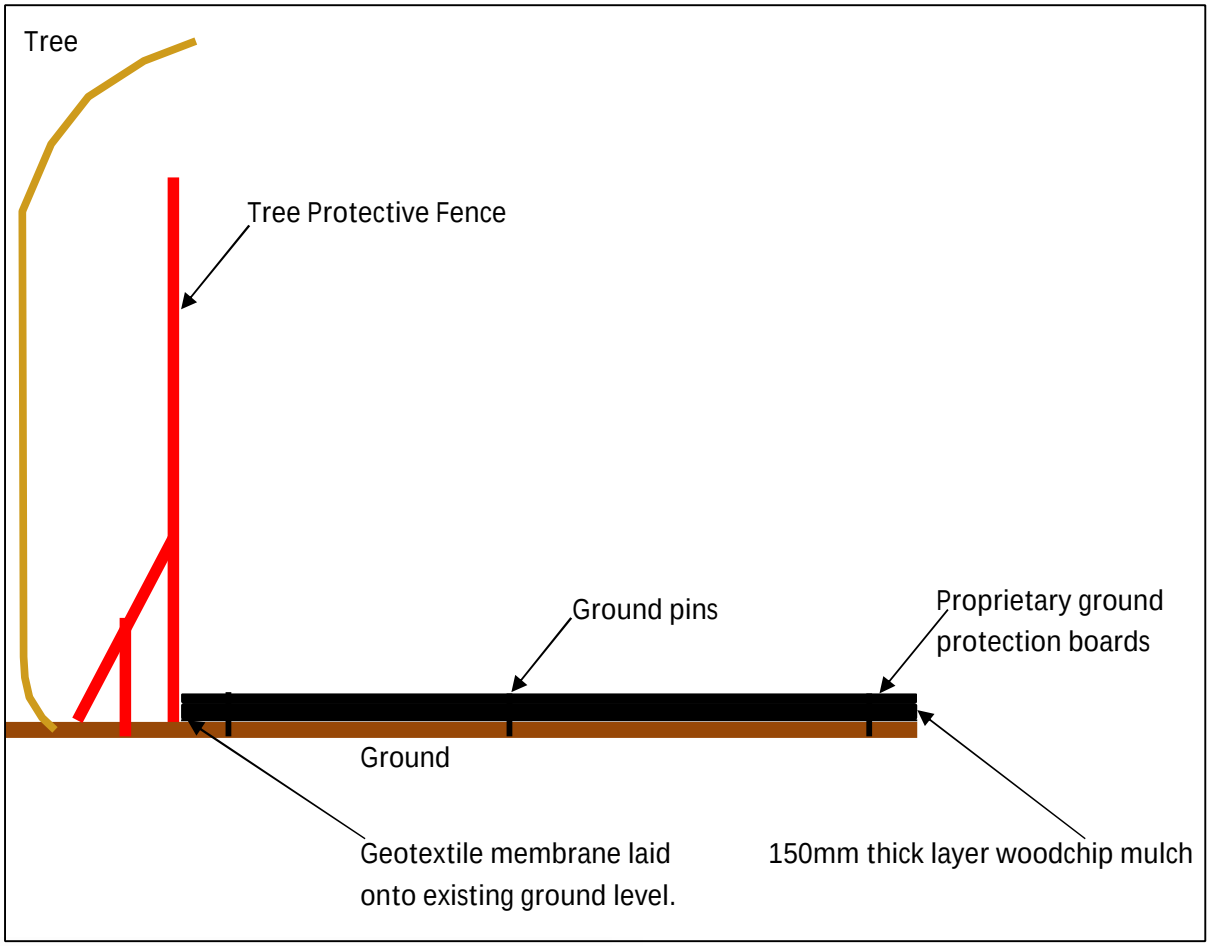

Figure 4

Example of all-weather warning signs to be affixed to fencing at 10m intervals

Figure 5 Arboricultural Consultant Site Visit

Company:	Site:
Consultant:	Date:
Address:	Site Address:
Representative:	Site Representative
Phone:	Phone

Purpose:
Site meetings:
Observations:
Recommendations

04/02/2024

Next site visit:

Appendix D

5. Qualifications

This report was constructed and written by

[redacted]

Oliver Lower ND Arb L3, Dip Arb L4, Dip Arb L6
Director & Principal Arboricultural Consultant

I have 20yrs experience in the Arboricultural industry having worked in both the UK and New Zealand during that time. and have attained the following accreditations and Level 4 Diploma (ABC) & Level 6 Diploma (ABC) in Arboriculture as well as a LANTRA Professional Tree Inspection Qualification. I provide consultancy service to several local government authorities and tutor in Arboriculture at Merrist Wood college. A comprehensive list of my qualifications, experience and training can be found on LinkedIn using this link: https://www.linkedin.com/in/oliver-lower-527a7377/

Accreditations

Professional Tree Inspection (LANTRA)

National Diploma Arboriculture L3

Level 4 Diploma Arboriculture (ABC)

Level 6 Diploma Arboriculture (ABC)

Bibliography

Strouts & Winter, R.G. & T.G., 1994. Diagnosis of Ill Health in Trees. 2nd ed. Standish: Arboricultural Assosciation.

Standards publication, BSI, 2012. Trees in relation to design, demolition, and construction - Recommendations. 1st ed. London: BSI.

Mattheck & Breloer, C & H, 1993. The body language of trees. 5th ed. Karlsruhe Research Centre: The Stationary Office.

British Standards Publication, BSi, 2012. BS 5837:2012 'Trees in relation to design, demolition and construction - Recommendations. 4th ed. London: BSI.

British Standards Publication, BSi, 2010. Tree Work - Recommendations. 3rd ed. London: BSi

Mattheck, C, 2007. Updated Field Guide for Visual Tree Assessment. 1st ed. Kerlsruhe Research Centre: Forschungszentrum Karlsruhe GmbH.

Weber, Mattheck, K.C 2003. Manual of Wood Decays in Trees. 1st ed. Kerl sruhe Research Centre: Forschungszentrum Karlsruhe GmbH.

Mattheck, Bethge, Weber, C,K,K, 2015. The Body Language of Trees, Encyclopedia of Visual Tree Assessment 1st ed. Kerlsruhe Research Centre: Forschungszentrum Karlsruhe GmbH.

British Standards Institute, 2014. Trees: from nursery to independence in the landscape – Recommendations. 1st ed. London: BSi

Trees & Design Action Group, 2014. Trees in Hard Lanscapes, A Guide for Delivery. 1st ed. London.

National Joint Utilities Group "Guidelines for the planning, installation and maintenance of utility services in proximity to trees, 1995."