Site:	Langstone Technology Park, Havant
Prepared by:	CM
Approved by:	JNR
Date:	2 July 2025

motion
Quadrant House
Broad Street Mall
Reading
RG1 7QE

Tel: 0118 467 4498
www.motion.co.uk

1.0 Introduction

1.1 This Technical Note has been prepared on behalf of XLB Property in relation to a permitted development on land at Langstone Park, Havant (the Site). The Site was granted outline planning permission (Ref: APP/22/00172) for the phased demolition of existing buildings and the erection of new flexible employment floorspace (Use Classes E(g)(i)-(iii), B2 and B8 and ancillary uses (Use Classes E(b), E(d) and E(f) in December 2023.

1.2 The site is located to the south of the A27, approximately 1.3 kilometres south of Havant town centre. The site is located within a wider industrial area which includes a road network connecting the wider industrial estate to the wider highway network. The site benefits from close proximity to the A27 and A3(M). The site is located within the administrative boundaries of Havant Borough Council (HBC) and Hampshire County Council (HCC).

1.3 As noted above, outline planning permission was granted on the 22nd December 2023 for the redevelopment of the site to provide up to 52,000 sqm of land use classes E(g)(i)-(iii), B2, and B8 alongside other ancillary Class E uses (Reference: APP/22/00172). Planning permission was granted subject to conditions; the full decision notice is attached within **Appendix A**. Planning condition 21 states:

"Prior to the first occupation of the development hereby permitted, a management plan for the proposed traffic barriers within the site shall be submitted to and approved in writing by the Local Planning Authority in consultation with the Highway Authority.

The traffic barriers shall cap the number of vehicle movements into the site via Langstone Road to no more than 585 two-way movements between 07:30 – 09:00 in accordance with the assessment undertaken with the Transport Assessment.

Reason: In the interests of highway safety and operation having due regard to policies CS20 and DM12 of the Havant Borough Local Plan (Core Strategy) 2011 and the National Planning Policy Framework"

2.0 Details of Design

ANPR Specification

2.1 Specifications for the ANPR system are provided at **Appendix B**. The system has the following features:

- 98% capture rate and 96% moving direction recognition accuracy;
- Whitelist/blacklist – up to 10,000 vehicles; and,
- Supports day and night operation.

2.2 Cameras are mounted on poles located upon verges or footways with a clear view of the barriers. All cameras feed into a central control unit capable of monitoring multiple video feeds.

Location of Barriers

2.3 The location of the barriers is shown on the drawing provided at **Appendix C**. The plan shows that, with the barrier closed, access and egress from the site and associated car parking can only be achieved from the west. HGVs are banned from passing through the barriers and appropriate signage restricting these movements is in place.

3.0 Operation of Barriers

3.1 Both the eastbound and the westbound barriers will be closed during the hours of 07:30 and 09:00. During this period, the barrier will only raise when a vehicle is identified as being on a pre-approved list by the ANPR system or if security open the barrier manually.

3.2 Employees of, and visitors to, the Site will be informed of the restrictions. Signs will be erected at the barrier informing drivers that there is no access through the barriers between the hours of 07:30 – 09:00. Drivers of vehicles who are not on the approved list will be required to communicate with security via the intercom system, they will be reminded of the restrictions and instructed to approach the site via Brookside Road in future.

3.3 In the event that the number of vehicles transiting the barriers during the restricted period exceeds the agreed limit, the approved list will be reviewed.

3.4 CCTV will be provided at the barrier and will be connected to the Site's facility management/security. Drivers of vehicles that regularly try to abuse the restriction will be specifically reminded of the restriction. Continued attempts to abuse the system could result in drivers being prohibited from entering the Site.

3.5 In the event of an emergency, the barriers will be raised by the Site's facility management/security to enable emergency service vehicles clear access.

4.0 Record Keeping and Reporting

4.1 Records of all movements through the barriers during the restricted period will be automatically logged. These records will be made available to HCC and HBC on request for monitoring purposes.

Appendix A

Decision Notice

Havant
BOROUGH COUNCIL

Public Service Plaza
Civic Centre Road
Havant
Hampshire PO9 2AX

T 023 9244 6019

www.havant.gov.uk

To:
Mrs S Stephen
Barton Willmore
7 Soho Square
London
W1D 3QB

For: XLB Property Ltd

The Town and Country Planning (Development Management Procedure) (England) Order 2015
Grant of Outline Planning Permission

Application Number: APP/22/00172
Site Address: Langstone Technology Park, 2B Langstone Road, Havant, PO9 1SA
Proposal: Outline Planning Application for Phased demolition of existing buildings and the erection of new flexible use employment floorspace (Use Classes E(g)(i)-(iii)/B2/B8) and ancillary uses (Use Classes E(b), E(d) and E(f)); and associated works. All matters reserved except Access.

Further to your application received on 02 March 2022 (which was valid from 10 March 2022) Havant Borough Council, as Local Planning Authority, **Grants Outline Planning Permission** for the above proposal in accordance with the submitted plans and particulars as detailed below.

This permission is subject to compliance with:

(i) The plans and other documents submitted with regard to your application; and

(ii) The following conditions:

Conditions:

1 Application(s) for approval of reserved matters for any phase must be made not later than the expiration of ten years beginning with the date of this permission and the development must be begun not later than whichever is the later of the following dates: (a)The expiration of ten years from the date of this permission; or (b)The expiration of two years from the final approval of the reserved matters, or in the case of approval on different dates, the final approval of the last such matter to be approved.
Reason: To comply with the requirements of Section 92 of the Town and Country Planning Act 1990 as amended by Section 51 of the Planning and Compulsory Purchase Act 2004.

2 The approval of the Local Planning Authority shall be obtained in respect of the following reserved matters before development first takes place on any phase - the

appearance; landscaping; layout; and scale.
Reason: The application is granted in outline only under the provisions of Article 5 of the Town and Country Planning (Development Management Procedure) (England) Order 2015 and details of the matters referred to in the condition have not been submitted for consideration.

3 The development hereby permitted shall be carried out in accordance with the following approved plans/documents:

Site Location Plan Drawing No. 008
Planning Statement Employment-led Redevelopment Project Ref: 20638 Ref: 32283/A5/SS/PN Issue/Rev: 01 February 2022
Design and Access Statement and Principles Document Rev A
Transport Assessment Rev B 16th February 2022
Technical Note (Highways) Motion 16th June 2022
Technical Note (Highways) 05 Motion 8th September 2022
Designers Response (Highways) Motion 27th September 2022
Stage 1 Road Safety Audit Gateway TSP ref: SG/WP/2207-10 RSA1 v1.0 July 2022
Stage 1 Road Safety Audit Gateway RSE ref: SG/WP/2209-09 RSA1 v1.0 22nd September 2022
Pedestrian and Cycle Improvements Footpath 51 Widening and Signage Drawing No: 2010053-10 Rev B
Pedestrian and Cycle Improvements Footpath 51 Widening and Signage Drawing No: 2010053-11 Rev A
Framework Travel Plan Dated 17th October 2022
Walking, Cycling and Horse-Riding Assessment Report: Report No. 2010053/WCHAR01
Construction Environmental Management Plan Framework Rev 1 15th June 2022
Flood Risk Assessment & Outline Drainage Strategy Report: Report Ref: R102 Rev 5 6th January 2022
Sustainability and Energy Statement February 2022 Rev C 4th February 2022
Masterplan Noise Assessment Project Ref: PJB9272/21410/V1.1
Air Quality Assessment February 2022 Report No. 11042.S V1
Land Quality Assessment Report Reference 13023/AB/LQA Rev 3.0 February 2022
Preliminary Ecological Appraisal February 2022 Project No. 10538 Rev 1
Biodiversity Net Gain Assessment February 2022 Project No. 10538 Rev 1
Utilities Statement & Strategy Report Ref: R100 Rev A December 21
Odour Technical Note Phlorum Ref: 11042 (Od)v1.docx 16 December 2021
Heritage Statement February 2022 Report Ref: edp5537_r005b
Arboricultural Impact Assessment SJ Stephens Associates Project no: 1746 7th January 2022

The following plans/documents have been considered in the determination of this application:

Indicative Phasing Plan Drawing No: 001
Proposed Development Access Plan 002
Proposed Building Heights Drawing No: 003
Indicative Plots Drawing No: 004
Landscape Mitigation Sections Drawing No: 004
Indicative Master Plan Drawing No: 005
Indicative Master Plan (Parking annotated) Drawing No: 005 Rev A
Existing and proposed site sections Drawing No: 008 Rev A
Proposed Site Section A-A Indicative Maximum Building Height Drawing No: 009
Proposed Section D-D Drawing No: 015
Plot A Scale and Massing
Landscape Framework Strategy Drawing No: 006
Landscape Software General Arrangement Sheet 1 of 4 Drawing No: 011

Landscape Software General Arrangement Sheet 2 of 4 Drawing No: 012
Landscape Software General Arrangement Sheet 3 of 4 Drawing No: 013
Landscape Software General Arrangement Sheet 4 of 4 Drawing No: 014
Landscape Mitigation Option 002 C
Landscape Mitigation Option SK003 B
Hollis Summary Report Reference: 92553/MAS/CBk 13 November 2020
Hollis Reinstatement cost assessment Ref: 92877/39/JT/LSS 22nd October 2020
Statement of Community Involvement becg January 2022
Economic Benefits Statement Project Ref: 32283 Issue/Rev 2 10th February 2022
Habitats Regulations Assessment Phlorum Rev 1 March 2022
Langstone Park - Floorspace Comparison 32283/A3/SS/PN

Reason: - To ensure provision of a satisfactory development.

4 The development hereby permitted shall provide a maximum of:

• 52,000 sqm GEA floorspace within use classes E(g)(i)-(iii)/B2/B8 and ancillary uses Use Classes E(b), E(d) and E(f);

• of which a maximum of 500 sqm GEA can be for ancillary uses Use Classes E(b), E(d) and E(f);

The development shall not be used for any other use class purposes within the Town and Country Planning (Use Classes) Order 1987 (as amended).

Reason: To ensure that the development can provide for a range of business and employment opportunities, including knowledge based businesses, in accordance with policy CS2 of Havant Borough Local Plan (Core Strategy) 2011 and the National Planning Policy Framework.

5 Prior to the commencement of any development hereby approved a phasing plan and schedule shall be submitted to and approved in writing by the Local Planning Authority to show how the full development of the site is to be carried out in numbered phases, and this plan and schedule shall be updated as phases are subsequently divided, subdivided or amalgamated and each updated version shall be submitted to and approved in writing by the Local Planning Authority. The phasing plan and schedule and any updated version shall include all of the following information:

i) The location of each phase

ii) The quantum of the development of each phase (size of the site or floorspace of buildings)

iii) Any elements of Sustainable Drainage (SUDS) to be provided within each phase and how these will connect to other drainage downstream or upstream of each phase with a timetable for the provision of drainage relative to each phase

iv) The provision of access to each phase

v) A timetable for the provision of ecological mitigation and provision of new habitat relative to each phase

vi) A timetable for the provision and completion of landscaping areas

Development shall only be carried out in accordance with the approved phasing plan,

schedule and timetable or any approved updated version unless otherwise approved in writing by the Local Planning Authority.

Reason: To ensure a co-ordinated and comprehensive form of development in which interdependent elements of the overall development are planned for and time tabled. It also allows flexibility by means of updating of these phases and time tabling as detailed plans for the site emerge. This is important in delivering a high quality and properly planned form of development having due regard to policy CS19 of the Havant Borough Local Plan (Core Strategy) 2011 and the National Planning Policy Framework.

6 Prior to the demolition of the building known as 'Building 6000', a historic building record (including a full photographic record of the exterior and interior of the building), shall be submitted to, and approved in writing by the Local Planning Authority, which shall retain the record thereafter. Original photographs suitably referenced, dated and supplemented by a key plan will be needed in fulfilment of this condition.

Reason: To serve as a record of the building in its existing state having due regard to policy CS11 of the Havant Borough Local Plan (Core Strategy) 2011, policy DM20 of the Havant Borough Local Plan (Allocations) 2014 and the National Planning Policy Framework . It is considered necessary for this to be a pre-commencement condition as these details need to be agreed prior to the demolition of the building and thus go to the heart of the planning permission.

7 The development shall be carried out in accordance with the submitted flood risk assessment (Flood Risk Assessment& Outline Drainage strategy Report ref:13023 / R102 rev 5.0) and the following mitigation measures it details:

• Finished floor levels shall be set at 5.90 mAOD for buildings within Zone 1 and 2 north of the link road, and 5.50 mAOD for the buildings within Zone 3B south of the link road

These mitigation measures shall be fully implemented prior to occupation in accordance with the scheme's timing/phasing arrangements. The measures detailed above shall be retained and maintained thereafter throughout the lifetime of the development.

Reason: To reduce the risk of flooding to the proposed development and future occupants (workers) having due regard to policy CS15 of the Havant Borough Local Plan (Core Strategy) 2011 and the National Planning Policy Framework.

8 No development shall take place on site until a Framework Construction Traffic Management Plan has been submitted to and approved in writing by the Local Planning Authority in consultation with the Highway Authority which sets the overarching construction traffic management principles the phase-specific Construction Traffic Management Plans must abide by.

Reason: To safeguard the amenities of the locality and in the interest of highway safety and having due regard to policies DM10 and DM12 of Havant Borough Local Plan (Core Strategy) 2011 and the National Planning Policy Framework.

9 Percussive piling or works with heavy machinery (i.e. plant resulting in a noise level in excess of 69dbAmax – measured at the sensitive receptor) shall be avoided during the bird overwintering period (i.e. October to March inclusive) unless otherwise agreed in writing by the Local Planning Authority in consultation with Natural England. The sensitive receptor is the nearest point of the SPA or any SPA supporting habitat (e.g. high tide roosting site).

Reason: To avoid impacts on the SPA, SPA supporting habitat and Protected Species having due regard to policies CS11 and DM10 of the Havant Borough Local Plan, the Habitat Regulations and the National Planning Policy Framework.

10 Notwithstanding the submitted details no phase of the development shall be commenced (including site clearance and demolition) unless and until full details of tree protection and mitigation have been submitted to and approved in writing by the Local Planning Authority for each phase. The tree protection measures relevant to each phase shall be in place prior to commencement and retained during the course of the demolition and construction works and the works carried out in accordance with the approved details of each phase.
Reason: To ensure the retention of important trees having due regard to policies CS11 and DM8 of the Havant Borough Local Plan (Core Strategy) 2011 and the National Planning Policy Framework.

11 No more vulnerable use class as defined in the National Planning Policy Framework shall be located in flood zone 3 or a future flood zone.
Reason: To ensure that a more vulnerable use class is not located in an area of flood risk for users having due regard to policy CS15 of the Havant Borough Local Plan (Core Strategy) 2011 and the National Planning Policy Framework.

12 Prior to the commencement of development in any phase, a detailed Ecological Mitigation, Compensation and Enhancement Strategy shall be submitted to and approved in writing by the Local Planning Authority. The Strategy shall be in accordance with the outline measures detailed within the Preliminary Ecological Appraisal (Phlorum, February 2022) and Biodiversity Net Gain Assessment (Phlorum, February 2022) unless otherwise agreed in writing by the local planning authority.
The Strategy shall include (but not necessarily be restricted to): details of all habitat and species mitigation measures; details of the ongoing management of all compensatory/enhancement habitat; location, type and number of all bat/bird boxes and other ecological enhancements; details of lighting. All ecological compensation/enhancement measures shall be installed/implemented in accordance with ecologist's instructions and retained in a location and condition suited to their intended function.

Reason: To protect and enhance biodiversity in accordance with the Conservation Regulations 2017, the Wildlife & Countryside Act 1981 (as amended), the NERC Act 2006, National Planning Policy Framework and Policy CS 11 of the Havant Borough Local Plan (Core Strategy) 2011.

13 The phased scheme shown for illustrative purposes on Drawing No. 11392-PL001 shall be built in accordance with the approved Design and Access Statement and Principles Document (Rev A) unless a further phase specific full planning application is submitted and approved by the Council in substitution for that part of the approved development.

Reason: To allow for the submission of a full planning application which would be assessed on its own planning merits having due regard to policy CS2 of the Havant Borough Local Plan (Core Strategy) 2011 and the National Planning Policy Framework.

14 The Reserved Matters stage proposed landscaping scheme for the relevant phase of development shall include details of the proposed landscaping and planting as shown on the following plans:

Landscape Mitigation Option SK002 C
Landscape Mitigation Option SK003 B

Reason: To ensure that additional planting is provided to the eastern boundary bund in the interests of providing additional screening to residential properties having due regard to policies CS11 and CS16 of the Havant Borough Local Plan (Core Strategy) 2011 and the National Planning Policy Framework.

15 The maximum height of buildings within any phase of the development shall not exceed those shown on Proposed Building Heights Drawing No: 003.

Reason: In the interests of the character and appearance of the area and the amenities of nearby residents having due regard to policy CS16 of Havant Borough Local Plan (Core Strategy) 2011 and the National Planning Policy Framework.

16 Any building(s) erected within the area annotated as Plot A on drawing No. 004 shall be sited a minimum of 4m to the west of the adjacent eastern estate road (as shown on the Indicative Master plan drawing No. 005).
Reason: To ensure an appropriate relationship to residential properties to the east and having due regard to policy CS16 and the National Planning Policy Framework.

17 Any building(s) erected within the area annotated as Plot C on drawing No. 004 shall be sited a minimum of 74m to the east of the eastern elevation of No.47 Brookside Road (as shown on the Indicative Master plan drawing No. 005).

Reason: To ensure an appropriate relationship to the closest residential property to the west and having due regard to policy CS16 and the National Planning Policy Framework.

18 The Reserved Matters applications in relation to any phase of development shall seek to ensure that the design of any units set close to nearby residential properties incorporate layout and designs that minimise potential impacts to residential amenities for example, in relation to loading bay positions, external equipment, openings, windows and lighting.
Reason: To ensure that impacts on residential amenity are minimised in accordance with policies CS16 and DM10 of Havant Borough Local Plan (Core Strategy) 2011 and the National Planning Policy Framework.

19 The Reserved Matters stage submission(s) shall demonstrate how they have incorporated the design principles set out in the Design and Access Statement and Principles Document Revision A. In particular the phased development shall seek to provide a whole site design aesthetic and provide a degree of continuity in building designs, detailing and materials.
Reason: In the interests of providing a high quality of design across the site and a campus style of development reflecting the attractiveness of the business site and the existing campus style development of Langstone Technology Park having due regard to policies CS11 and CS16 of Havant Borough Local Plan (Core Strategy) 2011 and the National Planning Policy Framework.

20 Prior to first the occupation of the development hereby permitted, a Delivery and Servicing Management Plan shall be submitted to and approved in writing by the Local Planning Authority in consultation with the Highway Authority. The approved plan shall include details of the management of HGV movements to and from the site to ensure the routing of these vehicles occurs
via Brookside Road.
Reason: To ensure any future occupier abides by the routing and servicing requirements agreed through the management plan in the interests of appropriate traffic management and having due regard to policies CS20 and DM12 of Havant Borough Local Plan (Core Strategy) 2011 and the National Planning Policy Framework.

21 Prior to the first occupation of the development hereby permitted, a management plan for the proposed traffic barriers within the site shall be submitted to and approved in writing by the Local Planning Authority in consultation with the Highway Authority.

The traffic barriers shall cap the number of vehicle movements into the site via Langstone Road to no more than 585 two-way movements between 07:30 – 09:00 in accordance with the assessment undertaken with the Transport Assessment.

Reason: In the interests of highway safety and operation having due regard to policies CS20 and DM12 of the Havant Borough Local Plan (Core Strategy) 2011 and the National Planning Policy Framework.

22 Prior to the occupation of any phase of the development hereby permitted, plans detailing the signage strategy to direct HGV movements to access the site via Brookside Road shall be submitted to and approved in writing by the Local Planning Authority in consultation with the Highway Authority. The approved signage strategy shall be implemented prior to first occupation of the development and thereafter retained and maintained unless otherwise agreed in writing by the Local Planning Authority.

Reason: To ensure that HGV movements are directed to limit access from Langstone Road in the interest of traffic flow and highway safety and having due regard to policies CS20 and DM12 of the Havant Borough Local Plan (Core Strategy) 2011 and the National Planning Policy Framework.

23 Prior to first occupation of the development hereby permitted, final details of the pedestrian and cycle link between Langstone Road and Footpath 51, as indicatively shown in drawing number 2010053-11 Rev B, supported by a Stage 1 Road Safety Audit, shall be submitted to and approved in writing by the Local Planning Authority in consultation with the Highway Authority.

No phase of the development hereby approved shall be brought into use until the approved works have been implemented, and thereafter they shall be retained and maintained.

Reason: To provide cycle connectivity to the site having due regard to policies CS19 and CS20 of Havant Borough Local Plan (Core Strategy) 2011 and the National Planning Policy Framework.

24 Construction Environmental Management Plan:

Prior to the commencement of development in each phase (including demolition) a Construction Environmental Management Plan (CEMP) shall be submitted to and approved in writing by the Local Planning Authority for that phase. The CEMP shall include, but not be limited to, the following:

In relation to the impact on the strategic road network and environmental impacts

Construction traffic routes and their management and control, parking and turning provision to be made on site, measures to prevent mud being deposited on the highway, adequate provision for addressing any abnormal wear and tear to the highway, and a programme for construction.

• Construction Traffic Management Plan (to include the co-ordination of deliveries and plant and materials and the disposing of waste resulting from demolition and/or construction so as to avoid undue interference with the operation of the public

highway, particularly during the Monday-Friday AM Peak (0800-0900) and PM Peak (1630-1800) periods);
• an estimate of the daily movement of the construction traffic;
• the hours of construction work and deliveries;
• area(s) for the parking of vehicles of site operatives and visitors;
• area(s) for the loading and unloading of plant and materials;
• area(s) for the storage of plant and materials used in constructing the development;
• details of waste management arrangements;
• consideration of emissions to air, water and land. Including noise & vibration, dust, general discharges and appropriate mitigation strategies;
• the storage of materials and construction waste, including waste recycling where possible;
• Risk Assessments and Method Statements for the works; and
• contact details of personnel responsible for the construction works.

In relation to minerals recovery:

A statement providing the following:

i. a method for ensuring that minerals that can be viably recovered during the development operations are recovered and put to beneficial use;
and,
ii. a method to record the quantity of recovered mineral (re-use on site or off site) and to report this data to the Local Planning Authority in consultation with the Minerals Planning Authority.

In relation to steps and procedures that will be implemented to avoid or mitigate constructional impacts on the adjacent Chichester and Langstone Harbours SPA, Ramsar and the Spas functional land:

• Noise/visual/vibrational impacts
• Visual screening (for SPA birds)
• Storage of construction materials/chemicals and equipment;
• Dust suppression
• Chemical and/or fuel run-off from construction into designated sites
• Waste disposal.

All measures forming part of the approved CEMP for each phase of development including demolition shall be implemented in full through the course of development operations within that phase.

Reason: To mitigate any adverse impact from the development on the A27 and to ensure that the A27 continue to be effective parts of the national system of routes for through traffic in accordance with section 10 of the Highways Act 1980 and to satisfy the reasonable requirements of road safety. To ensure that environmental impacts are controlled and where necessary mitigated including impacts on the SPA. All having due regard to policies CS11, CS15, CS20 and DM12 of the Havant Borough Local Plan (Core Strategy) 2011 and the National Planning Policy Framework.

25 Prior to the commencement of each phase of development, full details of all proposed drainage and its location relevant to that phase shall be submitted to and approved in writing by the Local Planning Authority (in consultation with National Highways). Each phase of development shall thereafter be undertaken in strict accordance with the approved details of each phase of development hereby permitted and retained in accordance with the agreed specification. No surface water shall be permitted to run off from the proposed development onto the Strategic Road Network or into any drainage system connected upstream of the Strategic Road Network. No drainage connections from any part of the development hereby

permitted may be made to any
Strategic Road Network Drainage system.

Reason: To ensure that the A27 continues to be an effective part of the national system of routes for through traffic in accordance with section 10 of the Highways Act 1980 and to satisfy the reasonable requirements of road safety having due regard to policies CS15 and DM15 of the Havant Borough Local Plan (Core Strategy) 2011 and the National Planning Policy Framework.

26 Prior to the commencement of each phase of development details of measures to protect public sewers shall be submitted to and approved in writing by the Local Planning Authority. The development in each phase shall thereafter be carried out in accordance with the approved protection details.
Reason: To protect drainage infrastructure in accordance with policies CS15 and DM10 of the Havant Borough Local Plan (Core Strategy) 2011 and the National Planning Policy Framework.

27 Prior to the commencement of each phase of development (excluding site clearance and demolition) details of the proposed means of foul sewerage disposal based on the principles set out in the Flood Risk Assessment and Outline Drainage Strategy Report, shall be submitted to, and approved in writing by, the Local Planning Authority. The development in each phase shall thereafter be carried out in accordance with the approved details unless otherwise agreed in writing by the Local Planning Authority.

Reason: To ensure that the development provides acceptable drainage to avoid flood risk and pollution having due regard to policies CS15 and DM10 of Havant Borough Local Plan (Core Strategy) 2011 and the National Planning Policy Framework.

28 Prior to the commencement of each phase of development a detailed surface water drainage scheme for that phase, based on the principles within the Flood Risk Assessment & Outline Drainage Strategy Report ref: 13023 / R102 Rev 5.0, shall be submitted and approved in writing by the Local Planning Authority.
The submitted details shall include:

a. A technical summary highlighting any changes to the design from that within the approved Flood Risk Assessment.

b. Detailed drainage layout drawings at an identified scale indicating catchment areas, referenced drainage features, manhole cover and invert levels and pipe diameters, lengths and gradients.

c. Detailed hydraulic calculations for all rainfall events, including the listed below. The hydraulic calculations should take into account the connectivity of the entire drainage features including the discharge location. The results should include design and simulation criteria, network design and result tables, manholes schedule tables and summary of critical result by maximum level
during the 1 in 1, 1 in 30 and 1 in 100 (plus an allowance for climate change) rainfall events. The drainage features should have the same reference that the submitted drainage layout.

d. Confirmation on how impacts of high groundwater will be managed in the design of the proposed drainage system to ensure that storage capacity is not lost, and structural integrity is maintained.

e. Confirmation that sufficient water quality measures have been included to satisfy the methodology in the Ciria SuDS Manual C753.

f. evidence to show that the proposed SuDS scheme will ensure there will be no deterioration in water quality (or changes in water quantity) in discharges from the site.

g. Exceedance plans demonstrating the flow paths and areas of ponding in the event of blockages or storms exceeding design criteria.

The development in each phase shall thereafter be carried out in accordance with the approved drainage details for that phase.

Reason: To ensure that the development ensures appropriate surface water drainage and does not increase flood risk or impact water quality having due regard to policy CS15 of Havant Borough Local Plan (Core Strategy) 2011 and the National Planning Policy Framework.

29 Prior to the commencement of each phase of development the condition of the existing sewers, which will take surface water from the development site, shall be investigated. If necessary, improvement to their condition as reparation, remediation, restitution or replacement shall be undertaken before any connection is made. Evidence of this, including photographs shall be submitted to and approved in writing by the Local Planning Authority. If necessary, evidence that the asset owners have agreed to the principle of connection/reusing existing connections and discharge rates, shall be submitted before any connection is made.

Reason: To ensure that the development ensures appropriate surface water drainage and does not increase flood risk having due regard to policy CS15 of Havant Borough Local Plan (Core Strategy) 2011 and the National Planning Policy Framework.

30 Prior to the commencement of each phase of development hereby approved (other than any above ground site clearance, demolition of above-ground structures, or consequential works for the purpose of ensuring structural stability of retained construction-), an assessment of the nature and extent of contamination at the site, whether originating from within or outside the curtilage, shall be submitted to and approved in writing by the Local Planning Authority for that phase.

The assessment may comprise separate reports as appropriate, but unless specifically excluded in writing by the Local Planning Authority, shall include;

1) Site investigation appropriate to both the previous & approved uses of the site, to provide sufficient data and information to adequately identify & characterise any physical contamination on or affecting the site, and to inform an appropriate assessment of the risks to future occupants.

2) The results of an appropriate risk assessment based upon (1), and where unacceptable risks are identified, a Remediation Strategy that includes;
• appropriately considered remedial objectives,
• an appraisal of remedial &/or risk mitigation options, having due regard to sustainability, and;
• clearly defined proposals for mitigation of the identified risks.

3) A verification plan providing details of the data that will be collected in order to demonstrate that the works set out any Remediation Strategy required under (2) are complete, identifying any requirements for longer-term monitoring of pollutant linkages, maintenance of engineered mitigation measures, and arrangements for contingency action.

All elements shall be adhered to unless agreed in writing by the Local Planning

Authority.

Reason: To ensure that the development does not contribute to-, is not put at unacceptable risk from- nor is adversely affected by-, unacceptable levels of contamination. This condition is in line with policy DM10 of the Havant Borough Local Plan (Core Strategy) 2011, DM17 of the Havant Borough Local Plan (Allocations) 2014, and paragraphs 183-185 of the National Planning Policy Framework 2021. Prior investigations suggest that soil contamination may be present within previously un-investigated areas of the site that could pose a risk to controlled waters, buildings & services, and/or future occupants.

31 Prior to the commencement of each phase of development (excluding site clearance and demolition), details for the on site provision of cycle storage facilities for that phase shall be submitted to and approved in writing by the Local Planning Authority in consultation with the Highway Authority. The approved cycle parking shall be provided on site and made available for use prior to the occupation of each phase of development, and shall thereafter be retained at all times.

Reason: To ensure the adequate provision of on site facilities for cyclists, to provide non-car based travel in the interests of sustainability and having due regard to policies DM11 and DM14 of the Havant Borough Local (Core Strategy) 2011 and the National Planning Policy Framework.

32 Prior to the commencement of each phase of the development full details of the car parking proposed for that phase shall be submitted to and approved in writing by the Local Planning Authority in consultation with the Highway Authority. The approved parking shall be provided for each phase of the development prior to the occupation of the units within the phase, and shall thereafter be retained at all times.
Reason: In the interests of highway safety and having due regard to policy DM13 of the Havant Borough Local Plan (Core Strategy) 2011 and the National Planning Policy Framework.

33 Prior to the commencement of each phase of the development details of the Ecological Mitigation, Compensation and Enhancement Strategy requirements secured under condition 12 and how they relate to the relevant phase of development shall be submitted to and approved in writing by the Local Planning Authority for that phase.
All ecological compensation/enhancement measures for the relevant phase shall be installed/implemented in accordance with ecologist's instructions and retained in a location and condition suited to their intended function.

Reason: To protect and enhance biodiversity in accordance with the Conservation Regulations 2017, the Wildlife & Countryside Act 1981 (as amended), the NERC Act 2006, National Planning Policy Framework and Policy CS 11 of the Havant Borough Local Plan (Core Strategy) 2011.

34 Prior to the commencement of development in each phase (excluding site clearance and demolition), details of sustainable features such as Green Roofs, Photovoltaic cells and heat pumps for that phase shall be submitted to and approved in writing by the Local Planning Authority for that phase. The approved features shall be provided on site prior to the buildings in that phase being brought into use and thereafter retained and maintained unless otherwise agreed in writing by the Local Planning Authority.

Reason: To accord with the terms of the application and in the interests of sustainability having due regard to policy CS14 of Havant Borough Local Plan and the National Planning Policy Framework.

35 Prior to the commencement of development in each phase (excluding site clearance and demolition), written documentary evidence demonstrating that the development will achieve at minimum 'Excellent' against the BREEAM Standard (or equivalent if not available), in the form of a design stage assessment, shall be submitted to and agreed in writing by the Local Planning Authority for that phase. The development in that phase shall be carried out in accordance with the approved details.
Reason: To ensure the development contributes to sustainable construction having due regard to policy CS14 of the Havant Borough Local Plan (Core Strategy) 2011 and the National Planning Policy Framework.

36 Prior to the commencement of each phase of the development details of lighting proposed for that phase shall be submitted to and approved in writing by the Local Planning Authority. The lighting shall be designed to avoid light spill beyond the site and to protect ecology. The lighting subsequently installed shall accord with the approved details and no other lighting shall be installed on site unless otherwise agreed in writing by the Local Planning Authority.

Reason: To avoid light pollution and impacts on ecology having due regard to policies CS11, CS16 and DM10 of Havant Borough Local Plan (Core Strategy) 2011 and the National Planning Policy Framework.

37 No development shall take place on each phase of the development (excluding site clearance and demolition) until details of existing and finished floor and site levels for that phase relative to previously agreed off-site datum point(s) have been submitted to and approved in writing by the Local Planning Authority. The development shall be undertaken in accordance with the approved details.
Reason: To ensure that the development has an acceptable appearance in terms of the visual amenities of the area and residential amenities having due regard to policies CS11 and CS16 of Havant Borough Local Plan (Core Strategy) 2011 and the National Planning Policy Framework.

38 With the exception of demolition work and temporary works, no development hereby permitted shall commence within each phase until a specification of the materials to be used within that phase for the surfacing of all open parts of the site proposed to be hardsurfaced has been submitted to and approved in writing by the Local Planning Authority. The development permitted within that phase shall not be brought into use until the implementation of all such hardsurfacing has been completed in full accordance with that specification.

Reason: In the interests of the amenities of the locality and having due regard to policy CS16 of the Havant Borough Local Plan (Core Strategy) 2011 and the National Planning Policy Framework.

39 Notwithstanding any description of materials in the application no above ground construction works shall take place within each phase until samples and a full specification of the materials to be used externally on the buildings within that phase have been submitted to and approved in writing by the Local Planning Authority. Such details shall include the type, colour and texture of the materials. Only the materials so approved for that phase shall be used, in accordance with any terms of such approval.
Reason: To ensure the appearance of the development is satisfactory and having due regard to policies CS11 and CS16 of the Havant Borough Local Plan (Core Strategy) 2011 and the National Planning Policy Framework.

40 Details for the long-term maintenance arrangements for the surface water drainage system for each phase of the development shall be submitted to and approved in

writing by the Local Planning Authority prior to the development being brought into use on that phase. The submitted details shall include;

a) Specification of the responsibilities of each party for the implementation of the SuDS scheme;

b) Specification of a timetable for implementation;

c) Maintenance schedules for each drainage feature type and ownership;

d) Details of protection measures;

e) A management and maintenance plan for the lifetime of the development.

f) SuDS funding arrangements.

The maintenance and other arrangements shall thereafter be in accordance with the approved details unless otherwise agreed in writing by the Local Planning Authority.

Reason: To ensure suitable drainage and to avoid flood risk having due regard to policies CS15 and DM10 of Havant Borough Local Plan (Core Strategy) 2011 and the National Planning Policy Framework.

41 Hard standing areas including yards, roads and parking areas in each phase shall not be brought into use unless and until details of oil/petrol interceptors for surface water drainage have been submitted to and approved in writing by the Local Planning Authority for each phase. The approved details shall be provided on site in each phase prior to the areas being brought into use and thereafter retained and maintained in accordance with the approved details.

Reason: In the interests of protecting the water environment and having due regard to policies CS15 and DM10 of the Havant Borough Local Plan (Core Strategy) 2011 and the National Planning Policy Framework.

42 Prior to the occupation/use of each phase of the permitted development, any verification report required in accordance with condition 30 shall be submitted to and approved in writing by the Local Planning Authority for that phase. The report shall include results of sampling and monitoring carried out in accordance with the approved verification plan, and must demonstrate that site remediation criteria have been met. Where longer-term monitoring of pollutant linkages is identified as being necessary, the report shall clearly set out plans for monitoring, provision for maintenance, relevant triggers, and contingency actions (a “long-term monitoring and maintenance plan”).
The long-term monitoring and maintenance plan shall be implemented as approved.

Reason: To ensure that the development does not contribute to-, is not put at unacceptable risk from- nor is adversely affected by-, unacceptable levels of contamination. This condition is in line with policy DM10 of the Havant Borough Local Plan (Core Strategy) 2011, DM17 of the Havant Borough Local Plan (Allocations) 2014, and paragraphs 183-185 of the National Planning Policy Framework 2021. Prior investigations suggest that soil contamination may be present within previously un-investigated areas of the site that could pose a risk to controlled waters, buildings & services, and/or future occupants.

43 Each phase of the development shall not be brought into use unless and until details of the provision of Electric Vehicle (EV) charging points have been submitted to and approved in writing by the Local Planning Authority for that phase.

Unless otherwise agreed in writing by the Local Planning Authority, the EV charging points shall be provided on the basis of a minimum of 10% of parking spaces and with a minimum of 20% of parking spaces passively equipped.

The charging points shall be installed prior to use of the associated building phase being brought into use and thereafter retained and maintained in accordance with the approved details.

Reason: In the interests of sustainability and air quality having due regard to policies CS14 and DM10 of Havant Borough Local Plan (Core Strategy) 2011 and the National Planning Policy Framework.

44 The external sound level emitted from plant, machinery or equipment in any phase of the development shall be equal or lower than the representative background sound level, with noise levels assessed (if necessary) in accordance with BS 4142:2014+A1:2019 at the nearest and/or most affected noise sensitive premises.
Reason: In the interests of the amenities of nearby residents having due regard to policy DM10 of the Havant Borough Local Plan (Core Strategy) 2011 and the National Planning Policy Framework.

45 No externally visible or audible plant, machinery or structures required for ventilation or filtration purposes shall be installed in each phase of the development until and unless details of the external appearance and acoustic and odour prevention performance of the same have been submitted to and approved in writing by the Local Planning Authority for that phase.
Any plant, machinery or structures required for ventilation or filtration purposes shall be provided and maintained in accordance with the approved details.
Reason: To protect the residential amenities of nearby residents having due regard to policy DM10 of the Havant Borough Local Plan (Core Strategy) 2011 and the National Planning Policy Framework.

46 Within 6 months of each phase of the development first becoming occupied (or such other date as may be agreed in writing by the Local Planning Authority), written documentary evidence proving that the development has achieved at minimum Excellent against the BREEAM Standard (or equivalent if not available) in the form of post construction assessment and certificate as issued by a legitimate BREEAM certification body shall be submitted to the Local Planning Authority for its approval for that phase.
Reason: To ensure the development contributes to sustainable construction having due regard to policy CS14 of the Havant Borough Local Plan (Core Strategy) 2011 and the National Planning Policy Framework.

Other Important Information:

(1) This notice only relates to the decision of Havant Borough Council as Local Planning Authority under the Town and Country Planning Acts. It does not relate to any other application that may be required under the Building Regulations or under any other Act, Regulation, Byelaw or Order where the Council's approval may be needed. For further guidance as to the need for consent under the Building Regulations please phone 023 9244 6573.

(2) Your attention is drawn to the attached information regarding firstly your right to appeal to the Planning Inspectorate, if you are aggrieved by the Council's decision, and secondly the rights of an owner to, in certain circumstances serve a purchase notice on the Council. See www.planningportal.gov.uk/pcs.

(3) Any failure to adhere to the details of the approved plans, and other documents or to comply with any conditions listed above may lead to enforcement action being taken by the Council. If you wish to depart from the approved details or conditions in any way you should contact the Planning and Development Service at the Civic Offices or by telephoning 023 9244 6015.

(4) Your attention is drawn to the provisions of Section 12 of the Hampshire Act 1983, relating to access for the Fire Brigade. A copy of the Act may be inspected at the Planning and Development Reception at the Civic Offices.

(5) Before undertaking any work which affects a public highway (including a footpath) you must obtain specific written approval from the Head of Technical Services, Havant Borough Council, Civic Offices, Civic Centre Road, Havant PO9 2AX (tel. no (023)9244 6428/9). This requirement applies not only to the creation of new vehicle accesses involving excavation within a footway, verge or carriageway but also to the stopping of existing access(es) or the construction of new boundary walls and foundations immediately alongside the public highway.

(6) You are advised that consent may be required from Southern Water Services Ltd to build in the vicinity of public sewer. You can inspect a copy of the Southern Water Services Maps of public sewers, which are held by Technical Services at the Civic Offices to determine the proximity of any public sewer to the proposed development. If you are in any doubt or need information regarding the procedure for obtaining consent from Southern Water Services Ltd, you should seek further advice from the Development Control Manager, Southern Water Services Ltd (01962 714585).

(1) Southern Gas Networks - Overbuild Advisory Note

There are a number of risks created by built over gas mains and services; these are:

- Pipework loading - pipes are at risk from loads applied by the new structure and are more susceptible to interference damage.
- Gas entry into buildings - pipework proximity increases risk of gas entry in buildings. Leaks arising from previous external pipework able to track directly into main building from unsealed entry.
- Occupier safety - lack or no fire resistance of pipework, fittings, or meter installation. Means of escape could be impeded by an enclosed meter.

Please note therefore, if you plan to dig, or carry out building work to a property, site, or public highway within our gas network, you must:

1. Check your proposals against the information held at https://www.linesearchbeforeudig.co.uk/ to assess any risk associated with your development and
2. Contact our Plant Protection team to let them know. Plant location enquiries must be made via email, but you can phone us with general plant protection queries. See our contact details below:

Phone 0800 912 1722 / Email plantlocation@sgn.co.uk

In the event of an overbuild on our gas network, the pipework must be altered, you may be temporarily disconnected, and your insurance may be invalidated.

Further information on safe digging practices can be found here:

- Our free Damage Prevention e-Learning only takes 10-15 minutes to complete

and highlights the importance of working safely near gas pipelines, giving clear guidance on what to do and who to contact before starting any work https://www.sgn.co.uk/damage-prevention

- Further information can also be found here https://www.sgn.co.uk/help-and-advice/digging- safely

(2) In accordance with paragraphs 38-50 of the NPPF Havant Borough Council (HBC) takes a positive and proactive approach and works with applicants/agents on development proposals in a manner focused on solutions by:

- Offering a pre-application advice service, and
- Updating you of any issues that may arise in the processing of your application and where possible suggesting solutions, and,

In this instance:

- You sought and were provided with pre-application advice,
- You were updated about issues after the initial site visit.

(3) The applicant is advised of the following comments from Environmental Health which will guide the submission of details in relation to condition 36:

The applicant must assess the impact of any artificial light proposed as part of this development on the future use and indeed, the neighbouring properties within proximity. It is required to establish the impact of lighting on the surrounding environment that details are provided of any artificial lighting of the site and an artificial lighting impact assessment is undertaken with predicted lighting levels at proposed. Artificial lighting on and off site must meet the Obtrusive Light Limitations for Exterior Lighting Installations contained within the Institute of Lighting Professionals Guidance Notes for the Reduction of Obtrusive Light - GN01:2011 (or as superseded).

The artificial lighting impact assessment will be required to establish lighting during pre and post curfew, in accordance with the ILP guidance notes. The assessment of light intrusion into windows as vertical lux levels is required. A common software assessment technique of this is "The outdoor site lighting performance method (OSP)". This software provides a transparent "shoebox" surrounding the development. It has vertical sides at the boundary above the highest mounted luminaire in the installation or the highest point of the property illuminated. By identifying the location and magnitude of the maximum illuminances on the vertical surfaces of the shoebox, the potential for light trespass can be established.

(4) The following comments have been received from Environmental Health in relation to conditions 30 and 42:

Conditions numbered [30] & [42] omit any strict requirement for a desk-based assessment. This omission in the interests of flexibility, and to avoid any requirement for repetition of assessment work within subsequent development phases. However, given the scale of buildings to be demolished, the design of the required intrusive investigations may be helpfully informed by the existing body of investigatory work, alongside a phase-specific site walkover/building inspection prior to demolition, & research into previous business operations. It is also recommended

that phase specific risk assessments consider relevant results from previous investigations, where these might be material to the site conceptual model &/or any specific source pathway-target linkage (whether or not those results fall within the red-line area for that phase). The Council does not expect repetition of work in future phases where risks to common receptors have been adequately addressed in prior development phases – it will be acceptable to refer to previously approved documentation in support of discharging reserved matters conditions. This may apply to both investigation & assessment reports, or to remediation & risk mitigation provisions.

Alex Robinson

Alex Robinson
Executive Head of Place

22 December 2023

TOWN AND COUNTRY PLANNING ACT 1990

NOTIFICATION TO BE SENT TO AN APPLICANT WHEN A LOCAL PLANNING AUTHORITY REFUSE PLANNING PERMISSION OR GRANT IT SUBJECT TO CONDITIONS

- These notes are for information only and do not purport to set out the law on the subject.
- Only the applicant possesses the right of appeal.

Appeals to the Secretary of State

- If you are aggrieved by the decision of your local planning authority to refuse permission for the proposed development or to grant it subject to conditions, then you can appeal to the Secretary of State under section 78 of the Town and Country Planning Act 1990.

- If this is a decision on a planning application relating to the same or substantially the same land and development as is already the subject of an enforcement notice and you want to appeal against your local planning authority's decision on your application, then you must do so within 28 days of the date of this notice.

- If an enforcement notice is served relating to the same or substantially the same land and development as in your application and if you want to appeal against your local planning authority's decision on your application, then you must do so within 28 days of the date of service of the enforcement notice, or within 6 months [12 weeks in the case of a householder appeal] of the date of this notice, whichever period expires earlier.

- If this is a decision to refuse planning permission for a householder application and you want to appeal against your local planning authority's decision then you must do so within 12 weeks of the date of this notice.

- If this is a decision to refuse planning permission for a minor commercial application and you want to appeal against your local planning authority's decision then you must do so within 12 weeks of the date of this notice.

- If this is a decision to refuse express consent for the display of an advertisement and you want to appeal against your local planning authority's decision then you must do so within 8 weeks of the date of receipt of this notice.

- If this is a decision to refuse consent to work on a tree which is subject to a Tree Preservation Order and you want to appeal against your local planning authority's decision then you must do so within 28 days of the date of this notice.

- If this is a decision to refuse any other type of application and you want to appeal against your local planning authority's decision then you must do so within 6 months of the date of this notice.

- **Appeals can be made online at:** https://www.gov.uk/appeal-householder-planning-decision for householder applications; https://www.gov.uk/appeal-planning-decision for full applications; https://www.gov.uk/planning-inspectorate for anything else.

- The Secretary of State can allow a longer period for giving notice of an appeal but will not normally be prepared to use this power unless there are special circumstances which excuse the delay in giving notice of appeal.

- The Secretary of State need not consider an appeal if it seems to the Secretary of State that the local planning authority could not have granted planning permission for the proposed development or could not have granted it without the conditions they imposed, having regard to the statutory requirements, to the provisions of any development order and to any directions given under a development order.

If you intend to submit an appeal that you would like examined by inquiry, then you must notify the Local Planning Authority and Planning Inspectorate (inquiryappeals@planninginspectorate.gov.uk) at least 10 days before submitting the appeal. Further details are on GOV.UK.

Our Ref: APP/22/00172

IMPORTANT NOTICE FOR APPLICANTS WITH REGARD TO BUILDING REGULATIONS

This notice only relates to the decision of Havant Borough Council under the Town and Country Planning Acts. It does not relate to any other application that may be required any other Act, Regulation, Byelaw or Order where the Council's approval may be needed.

For further guidance as the need for consent under the Building Regulations, please telephone Havant Borough Council's Building Control team on:

023 9244 6571

Our Ref: APP/22/00172

Southern Gas advisory note

In June 2021 SGN issued a comprehensive advisory note

There are a number of risks created by built over gas mains and services; these are:

- Pipework loading - pipes are at risk from loads applied by the new structure and are more susceptible to interference damage.
- Gas entry into buildings - pipework proximity increases risk of gas entry in buildings. Leaks arising from previous external pipework able to track directly into main building from unsealed entry.
- Occupier safety - lack or no fire resistance of pipework, fittings, or meter installation. Means of escape could be impeded by an enclosed meter.

Please note therefore, if you plan to dig, or carry out building work to a property, site, or public highway within our gas network, you must:

1. Check your proposals against the information held at https://www.linesearchbeforeudig.co.uk/ to assess any risk associated with your development and
2. Contact our Plant Protection team to let them know. Plant location enquiries must be made via email, but you can phone us with general plant protection queries. See our contact details below:

Phone: 0800 912 1722 / Email: plantlocation@sgn.co.uk

In the event of an overbuild on our gas network, the pipework must be altered, you may be temporarily disconnected, and your insurance may be invalidated.

Further information on safe digging practices can be found here:

- Our free Damage Prevention e-Learning only takes 10-15 minutes to complete and highlights the importance of working safely near gas pipelines, giving clear guidance on what to do and who to contact before starting any work
  https://www.sgn.co.uk/damage-prevention

- Further information can also be found here
  https://www.sgn.co.uk/help-and-advice/digging-safely

SGN personnel will contact you accordingly.

Appendix B

Barrier and ANPR Specification

CAME

CAME.COM

FA01075-EN

Automatic barriers - GARD 8 series

EN English

G2081Z

INSTALLATION AND OPERATION

"IMPORTANT SAFETY INSTRUCTIONS FOR INSTALLATION"

"CAUTION: IMPROPER INSTALLATION MAY CAUSE SERIOUS DAMAGE, FOLLOW ALL INSTALLATION INSTRUCTIONS CAREFULLY"

"THIS MANUAL IS ONLY FOR PROFESSIONAL INSTALLERS OR QUALIFIED PERSONS"

ENGLISH

1 Legend of symbols

This symbol indicates sections to be read with particular care.

This symbol indicates sections concernig safety.

This symbol indicates notes to communicate to users.

2 Destination and limits of use

2.1 Destination

The GARD 8 automatic barrier was designed for use in private or public carparks, in residential areas or in highly trafficked areas.

The use of this product for purposes other than as described above and installation executed in a manner other than as instructed in this technical manual are prohibited.

2.2 Limits of use

Passage width of up to 7.60 meters with a 4 second aperture time.

3 Standard followed

Came Cancelli Automatici is ISO 9001:2000 and ISO 14Quality and Environmentally certified. Came entirely designs and manufactures its products in Italy. The product in question compliant to the following legislation: *see Declaration of Compliance.*

4 Description

4.1 Gearmotor

G2081Z was designed and manufactured by CAME CANCELLI AUTOMATICI S.p.A. and is compliant with safety regulations in force.

The cabinet is made of 2.5 mm painted galvanized steel. Inside the cabinet, the electromechanical gearmotor operates with a container for electric board and transformer.

Built with a anti-shearing safety system, it includes a safety contact in the inspection hatch lock.

The GARD 8 automation system is supplied with the following accessories:
G02000 - White-painted tubular aluminium rod, 2m (Ø 100 mm) complete with transparent slot cover;
G04000 - White-painted tubular aluminium rod, 4m (Ø 100 mm) complete with transparent slot cover;
G06000 - White-painted tubular aluminium rod, 6m (Ø 100 mm) complete with transparent slot cover;
G02040 - Ø 40 (yellow) balancing spring;
G04060 - Ø 50 (green) balancing spring;
G06080 - Ø 55 (red) balancing spring;
G06802 - Reinforcement for boom
G06803 - Telescopic joint and additional insert to attach the bar (this is obligatory for accesses of over 3.6m);

The following accessories are optional to the GARD 8 automation system:
RSE - Board for combined battery operation control and/or compass;
G02801 - Flashing dome lamp;
G02802 - Support for mounting the photoelectric cell (DIR) onto the cabinet (not applicable to barriers with bar and rack and/or mobile foot);
G028401 - Luminous cord for movement signalling;
G028402 - Luminous cord connecting cable;
G02807 - Fixed barrier support (obligatory for accesses of over 4m);
G02808 - Mobile barrier support (obligatory for accesses of over 4m);
G02809 - Red reflector strips (package of 20);
G0465 - Aluminium skirt (2 m modules);
G028011 - Door break-out bar bracket.

WARNINGS!
001G02802 Not for barriers fitted with 001G0465 skirt or 001G02808 swing-leg.
001G02808 For passage widths of max 7 m.
001G02807 For passage widths of over 7 m the swing-leg is mandatory.
001G0465 - 001G02808 cannot be used together.
Important! *Check that the safety equipment and accessories are CAME originals; this is a guarantee that also makes the system easy to set up and upkeep.*

4.2 Technical information

GEARMOTOR

Power supply: 230V A.C. 50/60Hz
Motor power supply: 230V A.C. 50/60Hz
Max. absorption: 2.8A
Condenser: 35µF
Rated power: 330W
Max. torque: 250 Nm

Reduction ratio: 1/202
Opening time: 8 s
Operative intermittence: 30%
Protection level: IP54
Weight: 91 kg
Insulation class: I

4.3 Parts description

AUTOMATION UNIT

1. Dome cover
2. Motor shaft plate
3. Intermediate plate
4. Boom-attachment cover
5. Anti-shearing protective cover
6. Cabinet
7. Casing for key-switch and digital selectors
8. Control panel
9. Lever arm
10. Boom-adjustment stopper
11. Transmission connecting rod
12. Gearmotor with encoder
13. Inspection hatch
14. Anchoring plate
15. Clamp
16. Adapter with gasket for SEL-series selectors

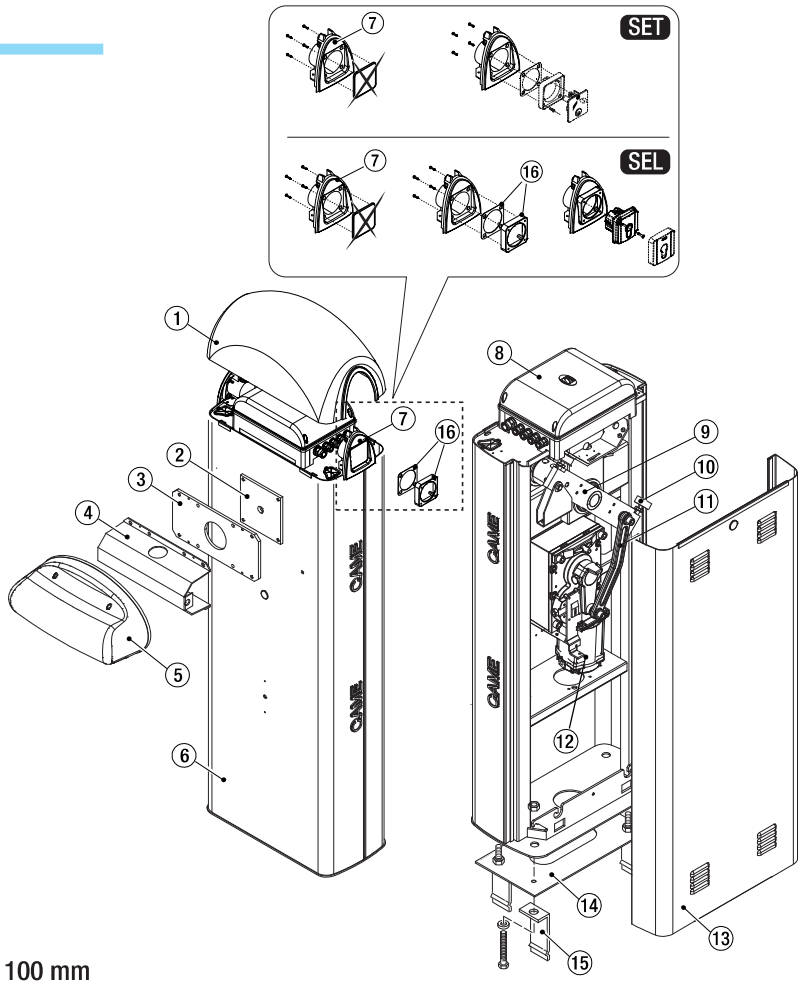

ACCESSORIES

1) G02000/G04000 - Aluminium bar, painted white, Ø 100 mm
2) G02040 - Ø40 (yellow) balancing spring
3) G04060 - Ø50 (green) balancing spring
4) G06080 - Ø55 (red) balancing spring
5) G02806 - Rack
6) G02802 - Support for DIR photoelectric cells
7) G028401 - Luminous cord
8) G02807 - Fixed barrier support
9) G02808 - Mobile barrier support
10) G02809 - Adhesive reflector strips
11) G02801 - Flashing dome lamp
12) G06803 - Telescopic joint and additional insert to attach the bar.

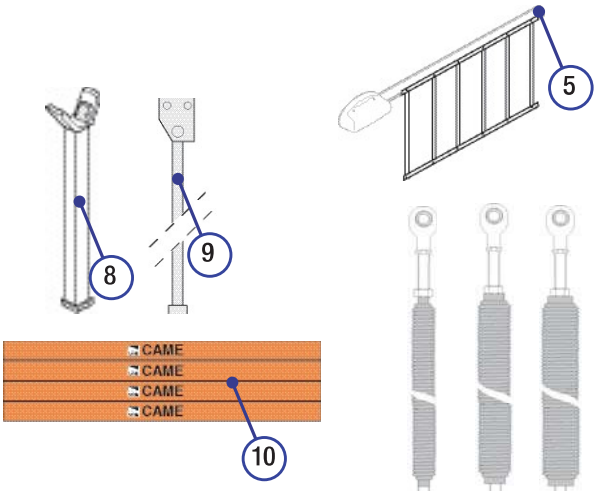

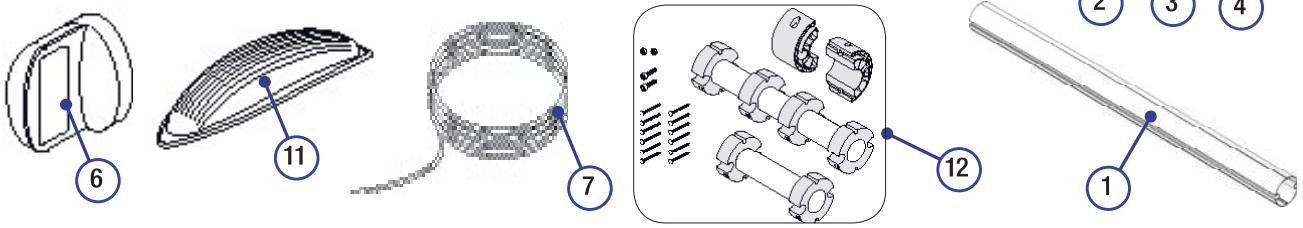

4.4 Size measurements

Measurements in mm

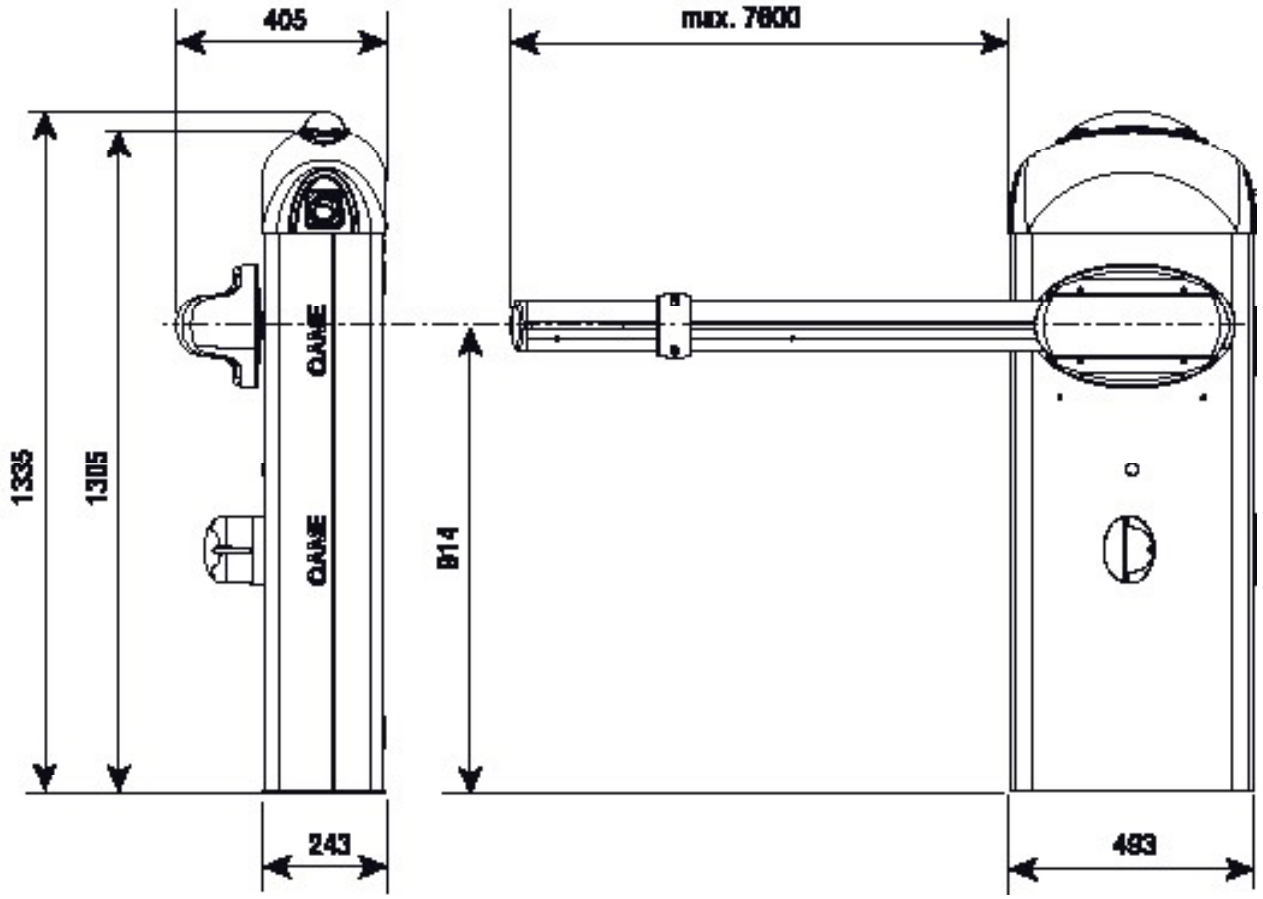

5 Installation

Installation must be carried out by expert qualified personnel and in full observance of regulations in force.

5.1 Preliminary checks

Before proceeding with the installation, it is necessary to:

- Make sure the area selected for the mounting of the base and for the unit itself presents no hazards;
- Provide for suitable omnipolar disconnection device with more than 3 mm between contacts to section power supply;
- ⏚ Connections inside the case made for protection circuit continuity are allowed as long as they include additional insulation with respect to other internal drive parts;
- Install suitable tubes and ducts for electric cable passage to guarantee protection against mechanical damage;

5.2 Tools and materials

Make sure all tools and materials necessary are within reach to install the edge in maximum safety, according to regulations in force. The following figure illustrates the minimum equipment for the installer.

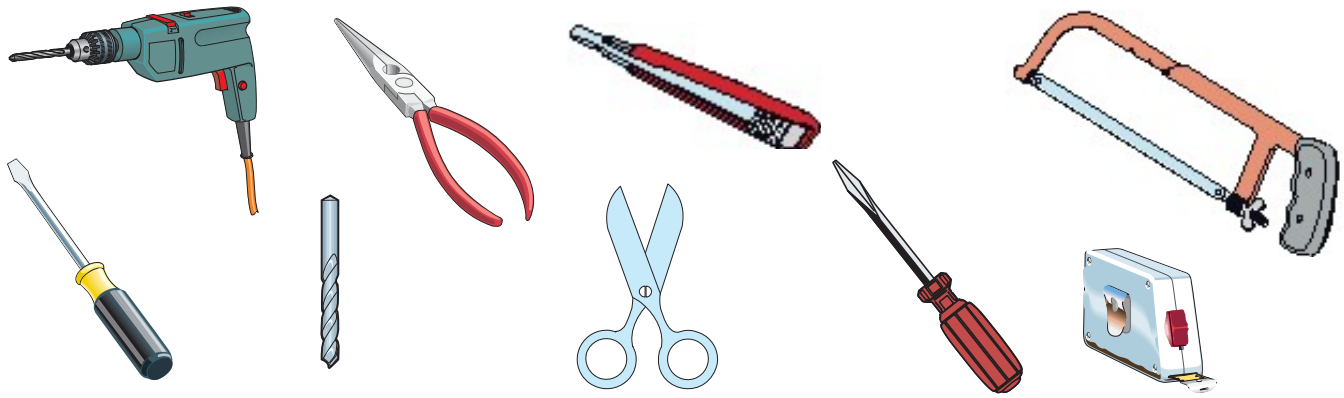

5.3 Cable list and minimun thickness

Connections	Type of cable	Length of cable 1 < 10 m	Length of cable 10 < 20 m	Length of cable 20 < 30 m
Alimentazione 230V	FROR CEI 20-22 CEI EN 50267-2-1	3G x 1,5 mm^2	3G x 2,5 mm^2	3G x 4 mm^2
Photoelectric cells TX		2 x 0,5 mm^2	2 x 0.5 mm^2	2 x 0,5 mm^2
Photoelectric cells RX		4 x 0,5 mm^2	4 x 0,5 mm^2	4 x 0,5 mm^2
24V power supply accessory		2 x 0,5 mm^2	2 x 0,5 mm^2	2 x 1 mm^2
Safety and control divices		2 x 0,5 mm^2	2 x 0,5 mm^2	2 x 0,5 mm^2
Antenna connection	RG58	max. 10m		
Metallic mass detector	(see documents provided with product)			

N.B.: An evaluation of the size of the cables with lengths other than the data in the table must be made based on the effective absorption of the connected devices, according to the instructions indicated by the CEI EN 60204-1 standards.
For connections that require several loads on the same line (sequential), the size given on the table must be re-evaluated based on actual absorption and distances.

5.4 Standar installation

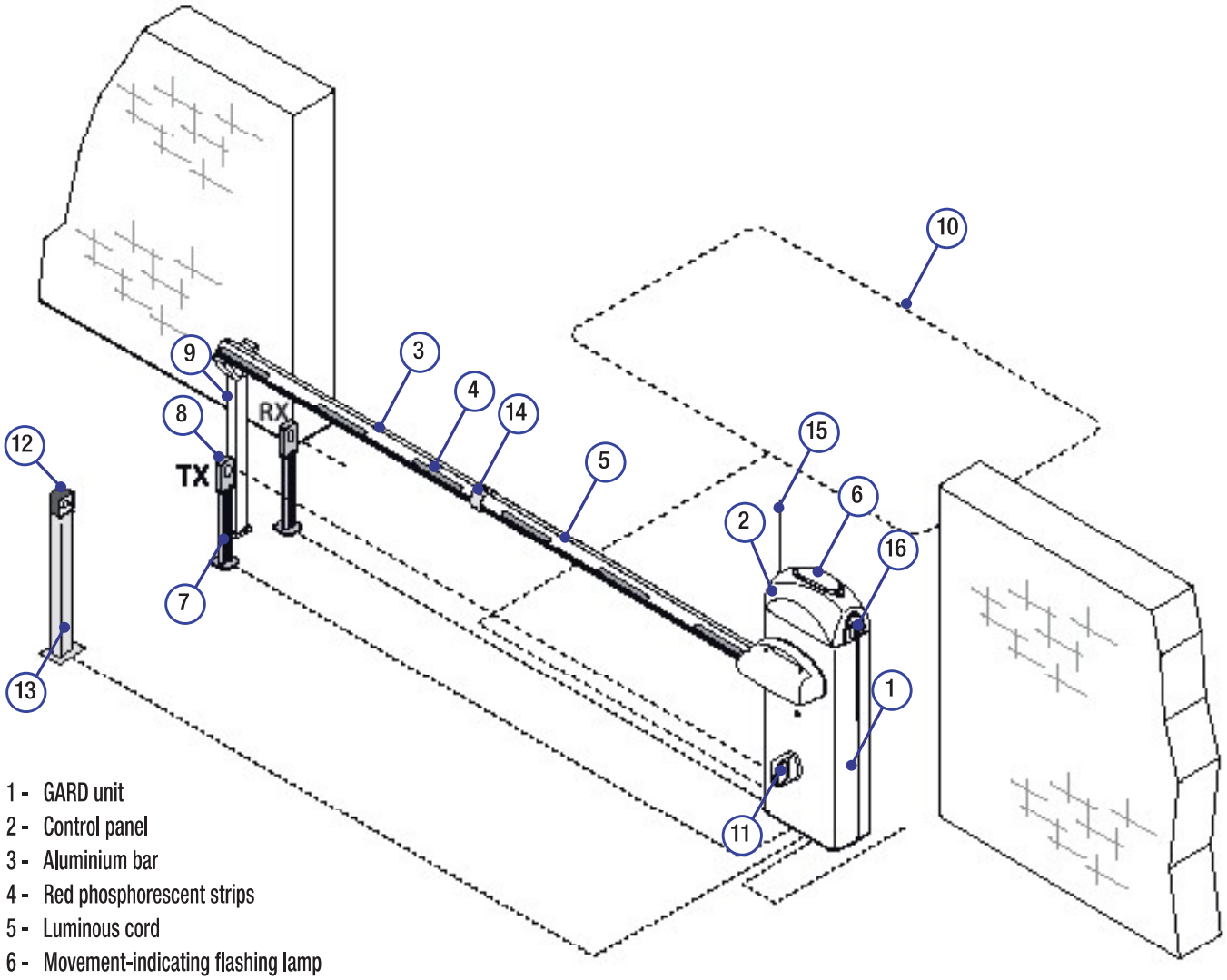

1 - GARD unit
2 - Control panel
3 - Aluminium bar
4 - Red phosphorescent strips
5 - Luminous cord
6 - Movement-indicating flashing lamp
7 - Column for photoelectric cells
8 - Photoelectric cells
9 - Fixed barrier support
10 - Magnetic sensor
11 - Photoelectric cell support
12 - Command divices (Keyboard, magnetic key, card, etc.)
13 - Column for reader
14 - Joint for rod
15 - Antenne
16 - Key-operated selector switch

ENGLISH

5.5 Fitting for unit base

⚠ The following applications are only examples, as the space required for unit installation and the accessories vary depending on dimensions and therefore it is up to the installer to select the best solution.

- Prepare a hole to house the fixing base and prepare sheath tubes from the branch pit for the connections. N.B. the number of tubes depends on the type of system and the accessories you will hook up.

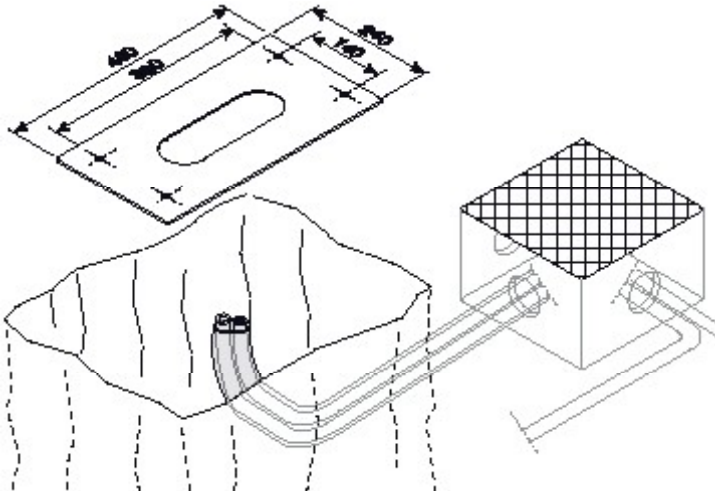

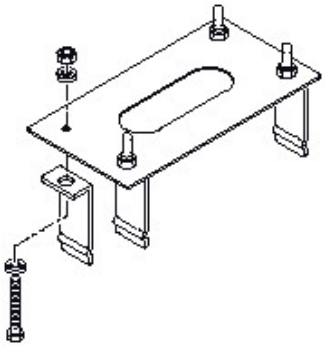

- Assemble the four anchoring clamps at the base.

- Fill the hole with concrete and immerge the clamps and the fixing base, paying particular attention to the sheath tube which must go through the hole at the base. The base must be perfectly level, clean and with the screw threads fully on the surface.

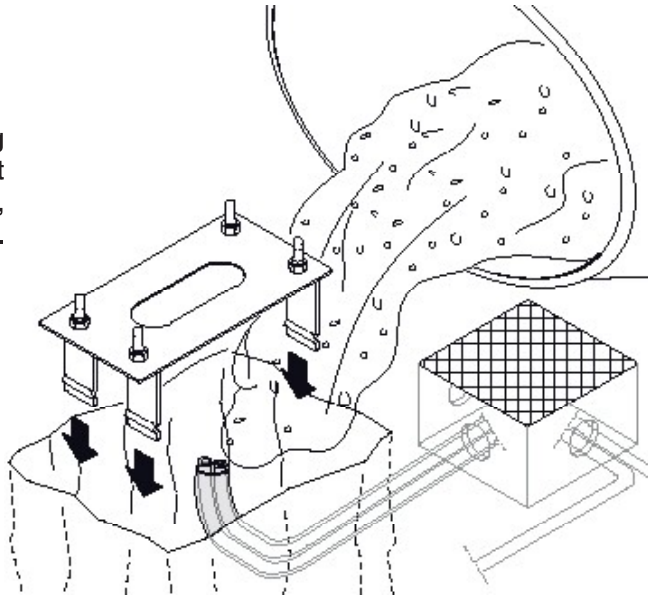

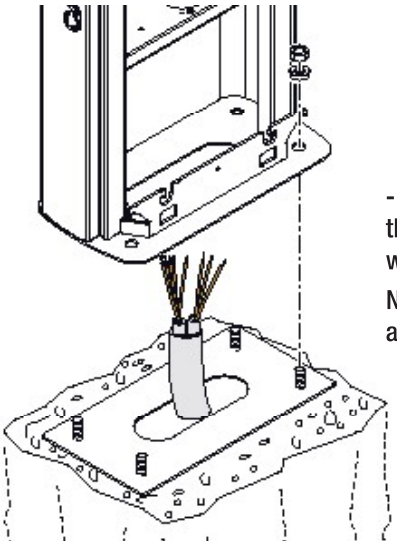

- Remove the nuts and washers from the threaded screws, position the cabinet on the base in correspondence with the 4 threaded screws and secure with the nuts and washers.

Note: We recommend installing the cabinet with the inspection hatch facing the internal area.

5.6 Installation of the Unit

- Remove the two screws at the upper dome's side and lift it.
Insert the customised key in the lock, turn it counter-clockwise and remove the hatch from the cabinet.

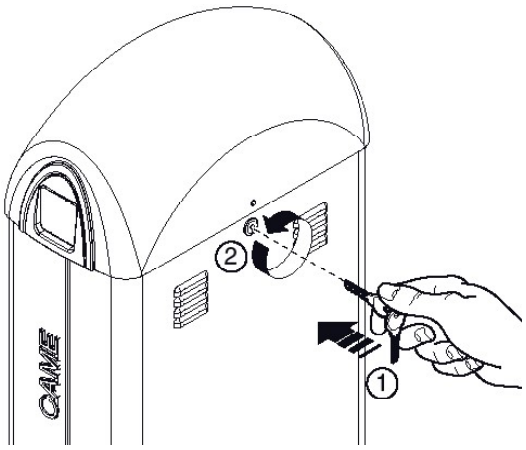

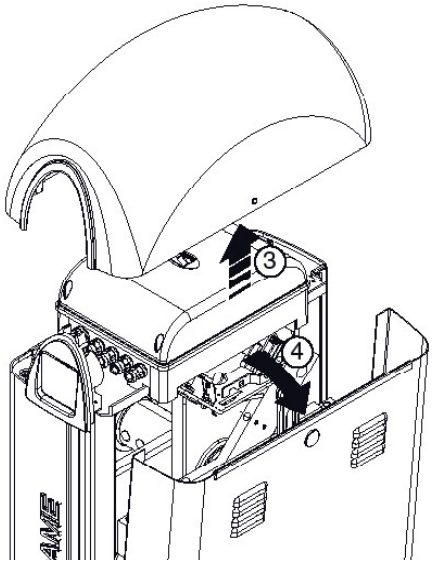

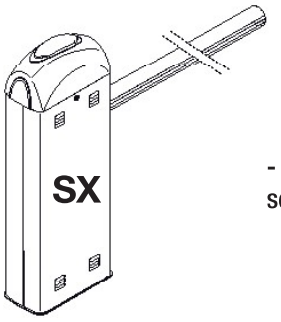

- The barrier is designed to be installed on the left of the gateway as seen from inside.

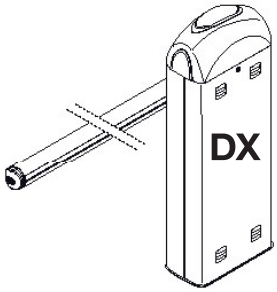

Should installation on the right be required, the direction of the bar's opening must be inverted. Proceed in the following manner:

- remove the spring securing bracket and the transmission rod from the lever arm;
- loosen the motor support grub screw;
- rotate the lever arm by 90°;

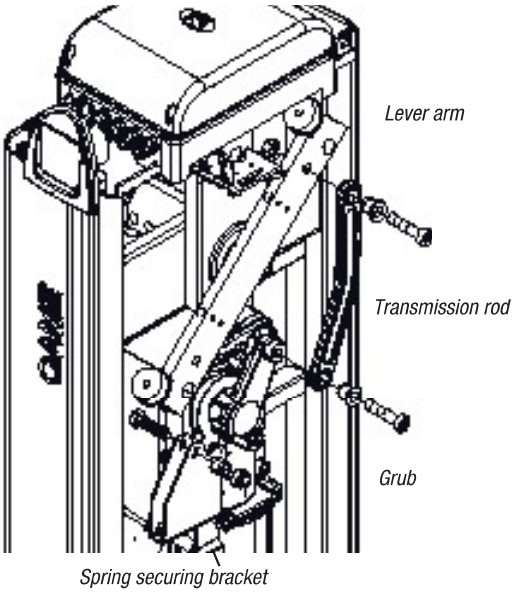

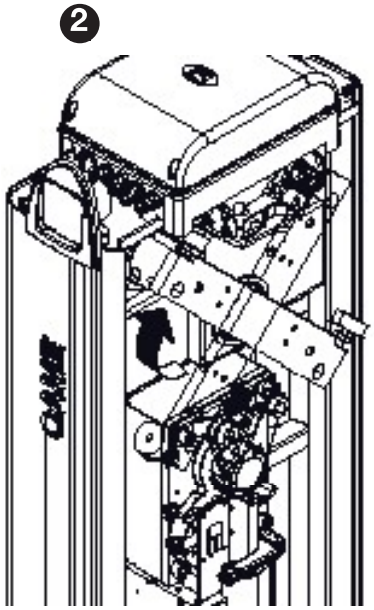

- Fix the spring securing bracket and the transmission rod on the side opposite that of lever arm;
- tighten the grub screw;
- invert the motor's U-V phases and the FA and FC endstop wires on the control panel terminal.

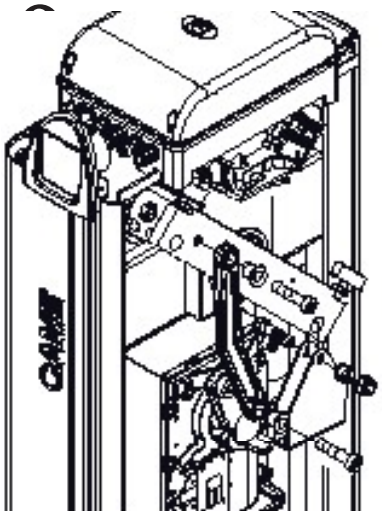

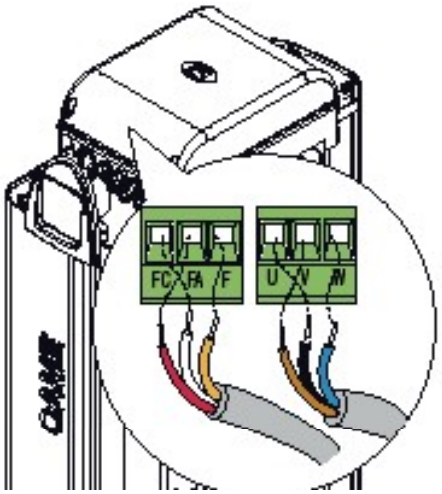

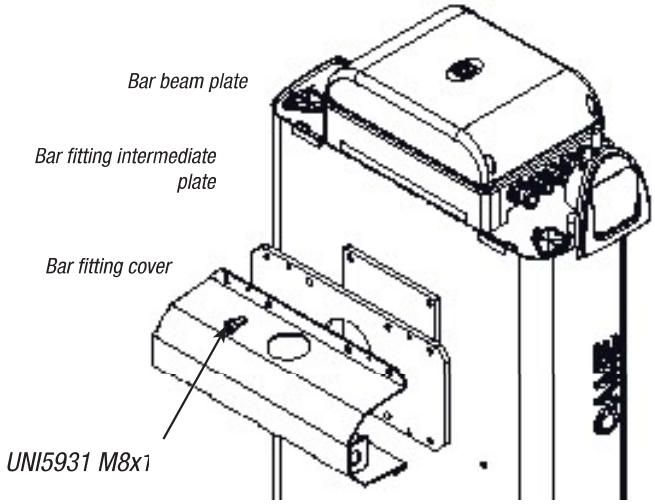

- Position the middle plate between the fitting plate and the bar-fitting cover, and put in one UNI 5931 M8x20 screw without tightening it to facilitate bar assembly.

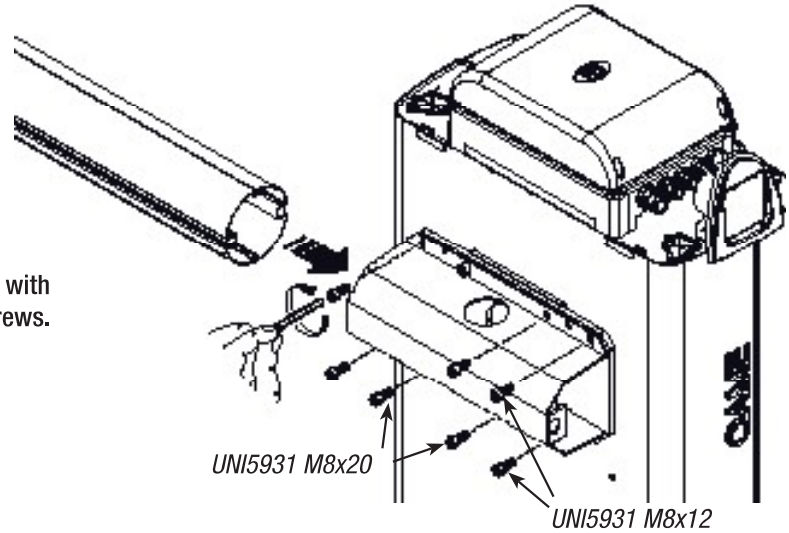

- Insert the bar in the fitting cover and secure it with screws.

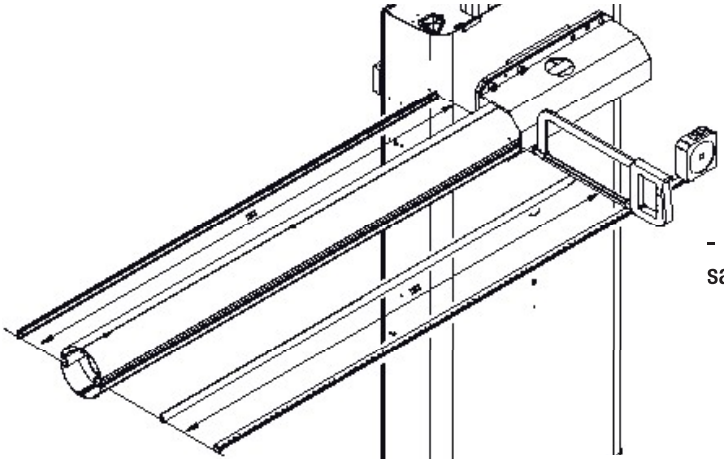

- Measure the length of the bar, cut the bar slot to the same length.

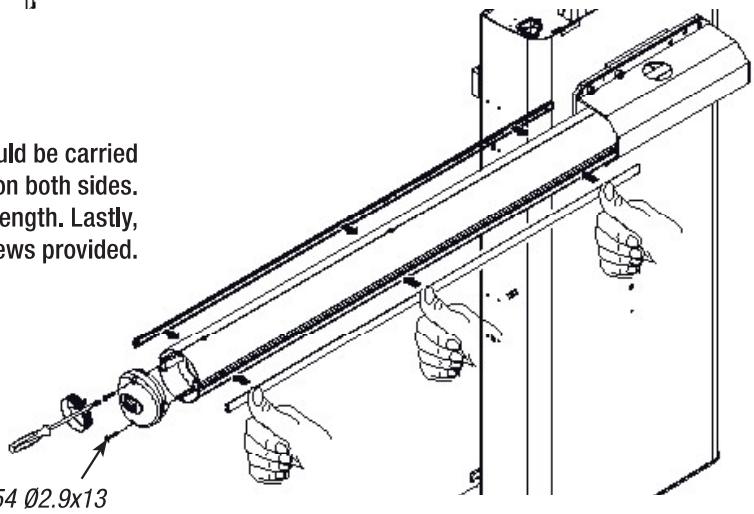

- Insert it in the bar's conduit, a procedure that should be carried out on both sides.
Insert the shock-resistant profile and cut excess length. Lastly, secure the bar end plug with the screws provided.

- Tighten the anti-shearing protection cover to the bar fitting with UNI6954 Ø3.9x19 screws.

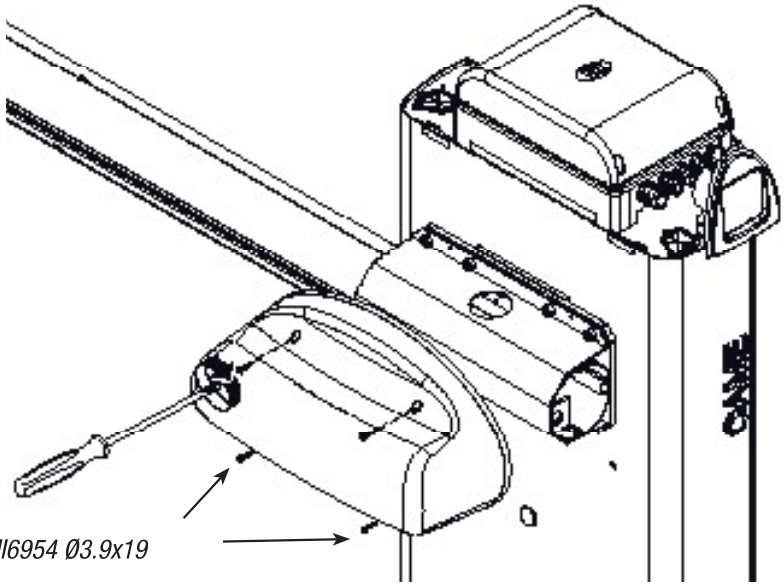

ENGLISH

5.7 Bar balancing

- Prior to bar balancing, select a suitable spring depending on the situation at hand. See table below:

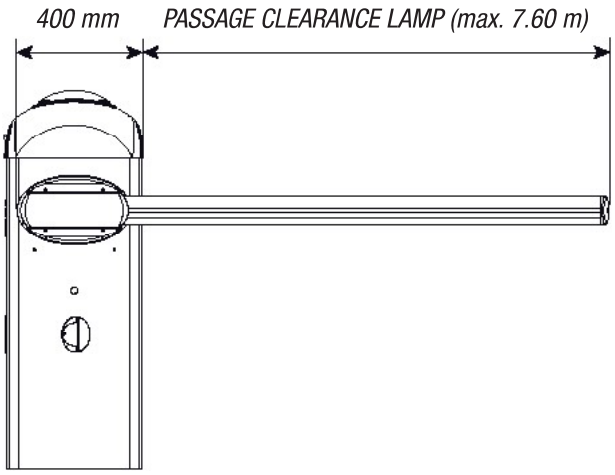

SPRING TYPES

- *Spring G02040 Øe = 40 mm*
- *Spring G04060 Øe = 50 mm*
- *Spring G06080 Øe = 55 mm*

Passage clearance lamp (m)		2.0	2.5	3.0	3.5	4.0	4.5	5.0	5.5	6.0	6.5	7.0	7.6
Bare bar*	first spring												
	second spring												
Bare bar* + mobile barrier support	first spring												
	second spring												
Bare bar* + luminous cord	first spring												
	second spring												
Bare bar* + luminous cord + mobile barrier support	first spring												
	second spring												
Bare bar* + rack	first spring												
	second spring												
Bare bar* + rack + luminous cord	first spring												
	second spring												

** By Bare bar we mean a bar complete with the transparent slot cover and end plug.*

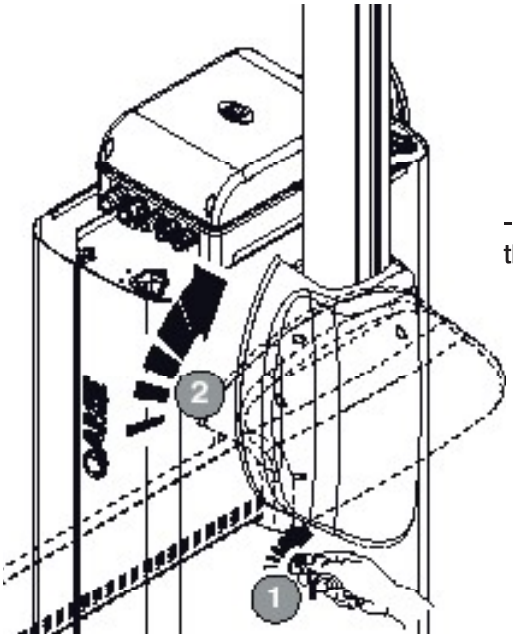

- Release the gearmotor and position the bar vertically, and then refasten the gearmotor.

- Insert the UNI5739 M12X70 screw into the spring securing bracket and tighten the UNI5588 M12 nut to the screw (1-2). Tighten the screw to spring (2) and the tie rod to the part underneath (3-4).

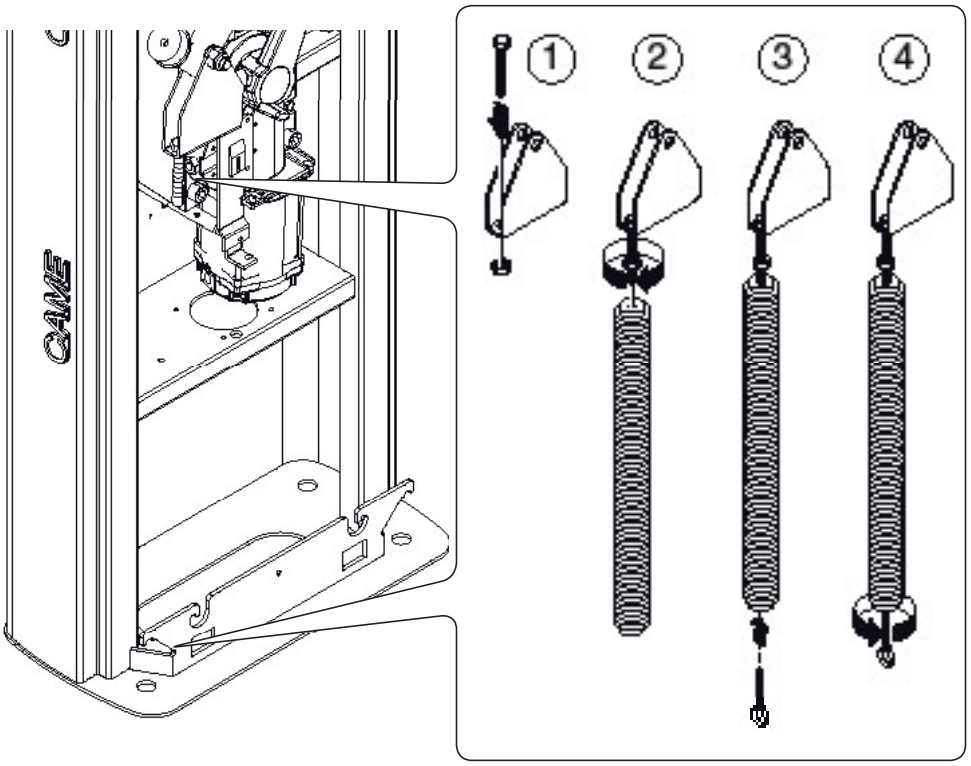

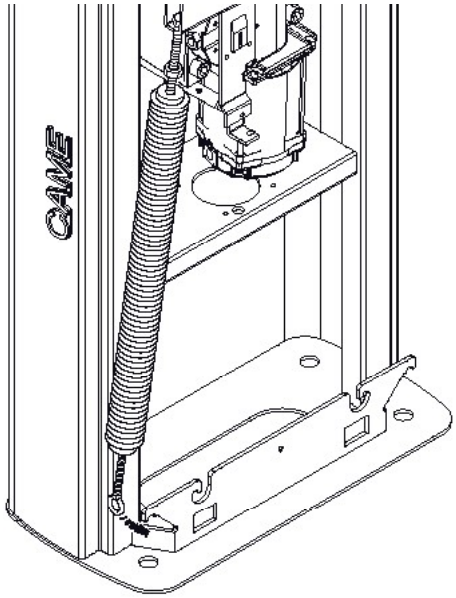

- Hook the tie rod to the anchoring racket.
Perform the same procedure if there is a second screw.

- Release the gearmotor and manually turn the spring to increase or decrease traction until the bar rests at 45°.

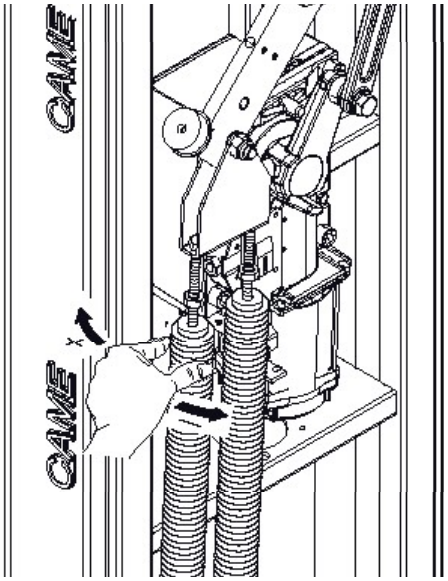

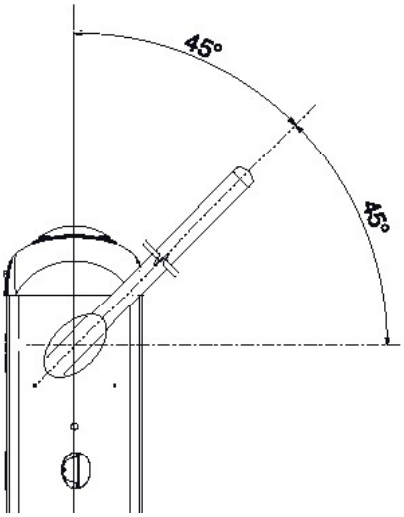

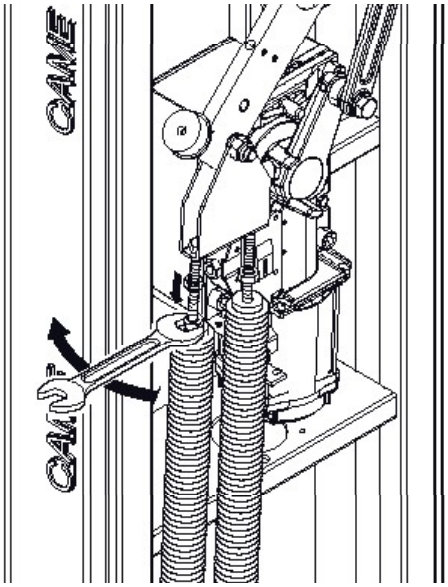

- Tighten the blocking nut and refasten the gearmotor.

Note: make sure the spring functions properly:
- the spring is loose when the bar is in the vertical position (at rest)
- the spring is tight when the bar is in the horizontal position (tense).

- Perform any electrical connections to the control panel (*see electrical connections paragraph*).

5.8 End stop adjustment

N.B.: perform this procedure after finishing the electrical connections.

Close the door and power up the system, activate the barrier to make sure it is parallel with the closed and at about 89° when open.

⚠ **Warning!** For greater safety and better unit performance, the bar's opening and closing operations should be carried out with the inspection hatch closed!

ENGLISH

If any adjustment of the vertical position (= opening) is needed, open the inspection door and rotate the free damper clockwise (to increase the bar's run) or counter-clockwise (to decrease the run).

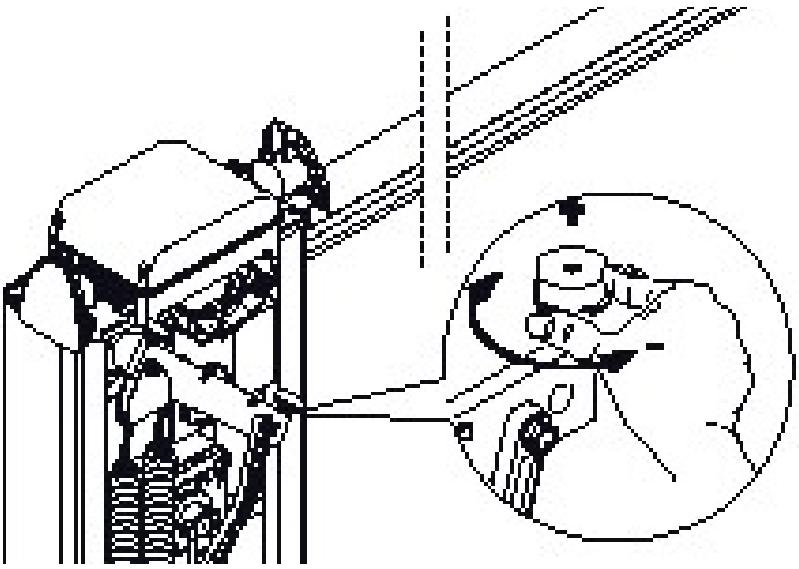

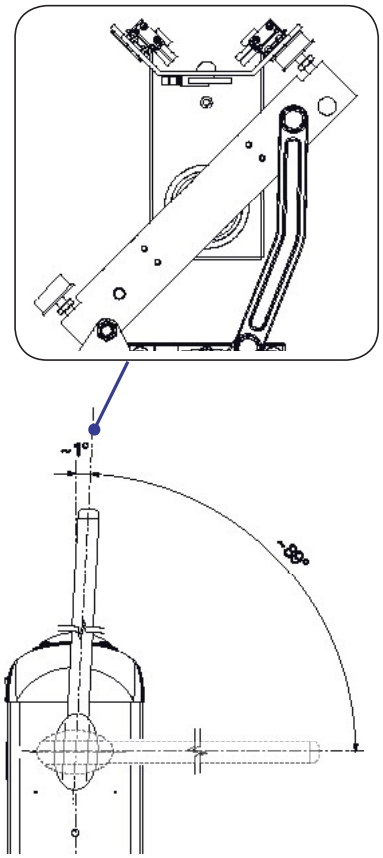

Similarly, open the bar and adjust the free damper, to regulate the horizontal position (= closing).

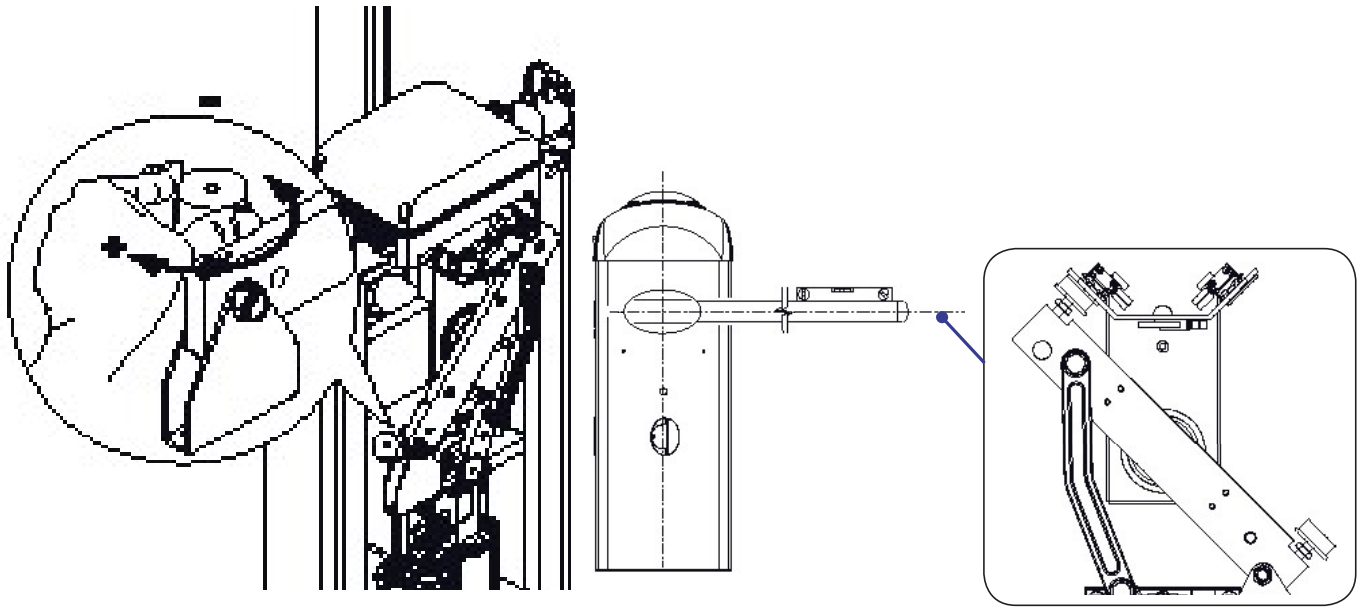

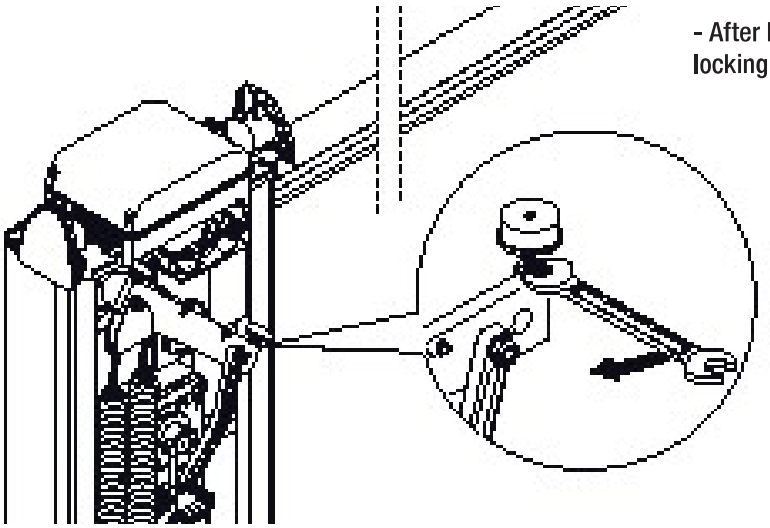

- After bar opening and closing adjustment, tighten the locking nuts under the dampers.

- After making adjustments and settings from the control panel, put the container lid in place and secure with screws....

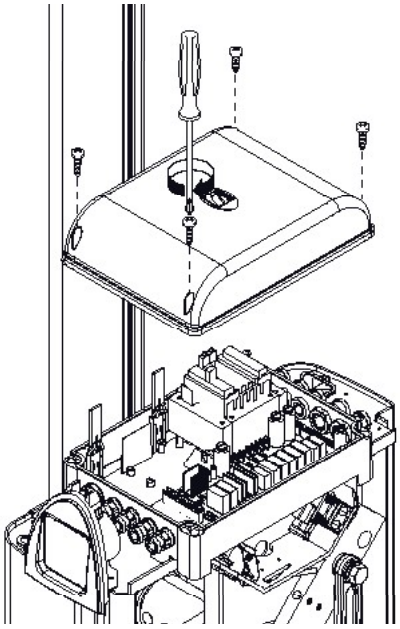

- ...place back the inspection door and the upper dome. Lock the door with the key.

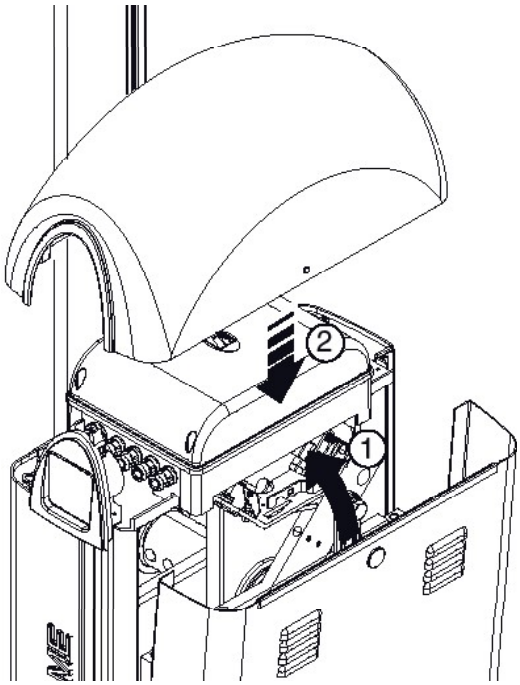

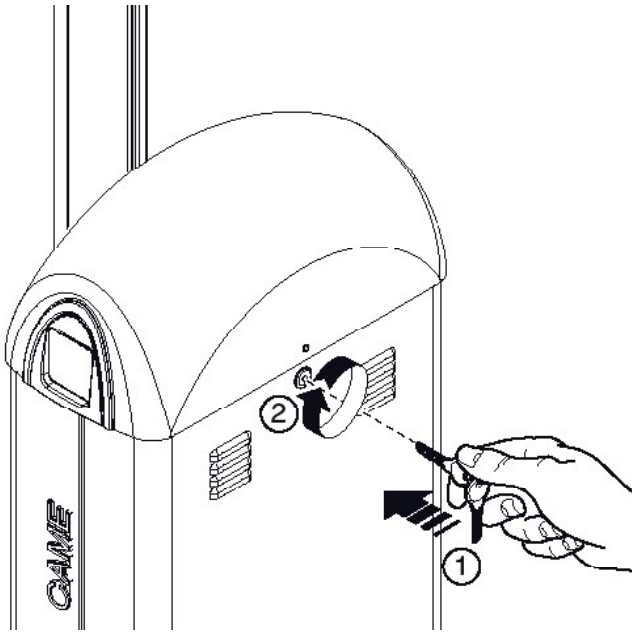

5.9 Manual release of the barrier

- Insert the key in the lock and turn it clock wise. Manually lift the bar and relock it by turning the key counterclockwise.

⚠ *WARNING! The release procedure may constitute a hazard for the user when, for whatever reason – the bar is fixed improperly to the housing during assembly, or the bar is cracked or broken in an accident, and so on – the tension springs no longer provide balance! These can thus cause a* brusque rotation of the bar attachment and/or of the bar itself.

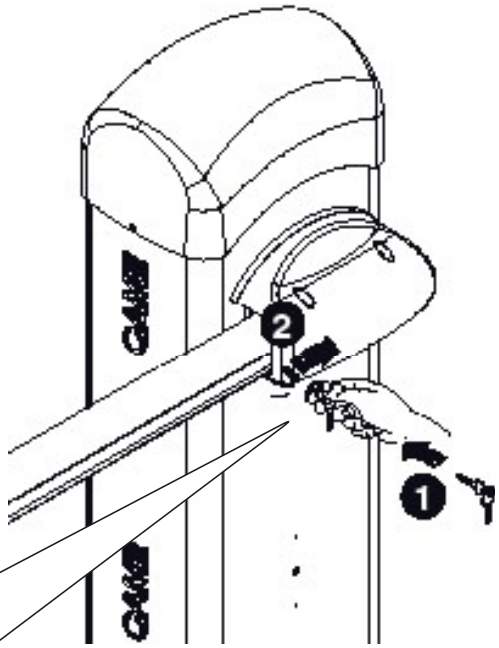

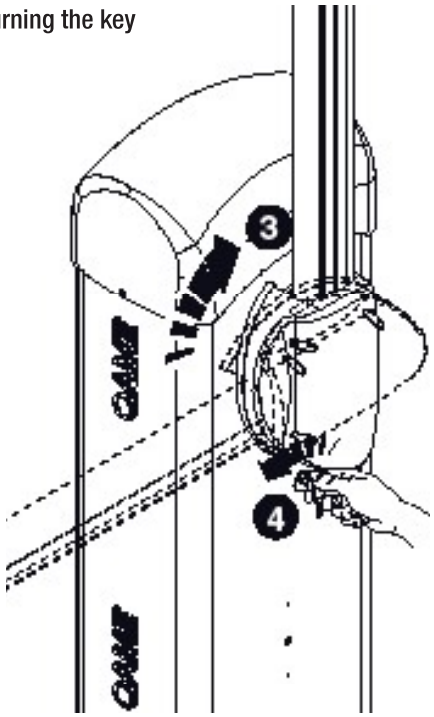

6 Description control panel

This product is engineered and manufactured by CAME cancelli automatici s.p.a. and complies with current safety regulations.

The control panel works on 230V a.c. of power, 50/60Hz frequency.

Both command and control devices and accessories are 24V powered. *Warning! Accessories must not exceed 40 W overall.*

In case the endpoint assembly does not intervene, the card nevertheless guarantees 20 seconds of operation. The card autonomously handles the Encoder (obstacle sensitive) safety function, which:
- when opening: the bar inverts the direction of travel until completely closed;
- when closing: the bar inverts the direction of travel until completely open.

Caution! *after three consecutive direction reversals, the bar will remain up and automatic closure will be discontinued. To close the gate, use the radio remote control or the push-button.*

All connections are protected by quick fuses, see table.

The card provides and controls the following functions:
- automatic closing after an open-command;
- immediate closure;
- pre-flashing by the motion indicator;
- obstacle detection when bar is still in any position.

The following command modes are possible:
- open/close;
- open/close and maintained action;
- Opening;
- Total stop.

Apposite trimmer regulate:
- the automatic closing run time;

Optional accessories:
- flashing crown and luminous band.
- bar open light marks the position of opening of the bar; it turns off after the closing operation;
- the RSE card, in order to activate the compass function or coupled through Dipswitches, see the relative technical literature.

Warning! *Before acting on the machinery, cut off the main power supply and disconnect any emergency batteries.*

TECHNICAL FEATURES	
Power supply	230 V - 50/60 Hz
max. rated power	400 W
Power draw when idling	25 W
Max power of 24V accessories	40 W
Insulation rating	II
Material	ABS
FUSES	
protection:	**fuse type:**
Electroblock	1.6 A-F
Electronic board (power supply line)	5 A-F
Accessories	2 A-F
Control devices	630 mA-F

6.1 Main components

1 - Line fuse
2 - Control unit fuse
3 - Accessories fuse
4 - Electroblock fuse
5 - Powersource Terminals
6 - Transformer Terminals
7 - Electroblock Terminals
8 - Endpoint assembly Terminals
9 - Coupled Barrier Terminals
10- Encoder Terminals
11- Connections Terminals
12- Radiofrequency Card input (see table on page 20)
13- RSE serial card input (optional for connection coupled barriers and/or compass)
14- TCA Trimmer: adjusts automatic closing time
15- Function selector Dip switch
16- Radio code storing buttons
17- Signalling LEDs for radio codes/automatic closing
18- Gate run counter
19- Motor Terminals
20- Transformer
21- Condenser

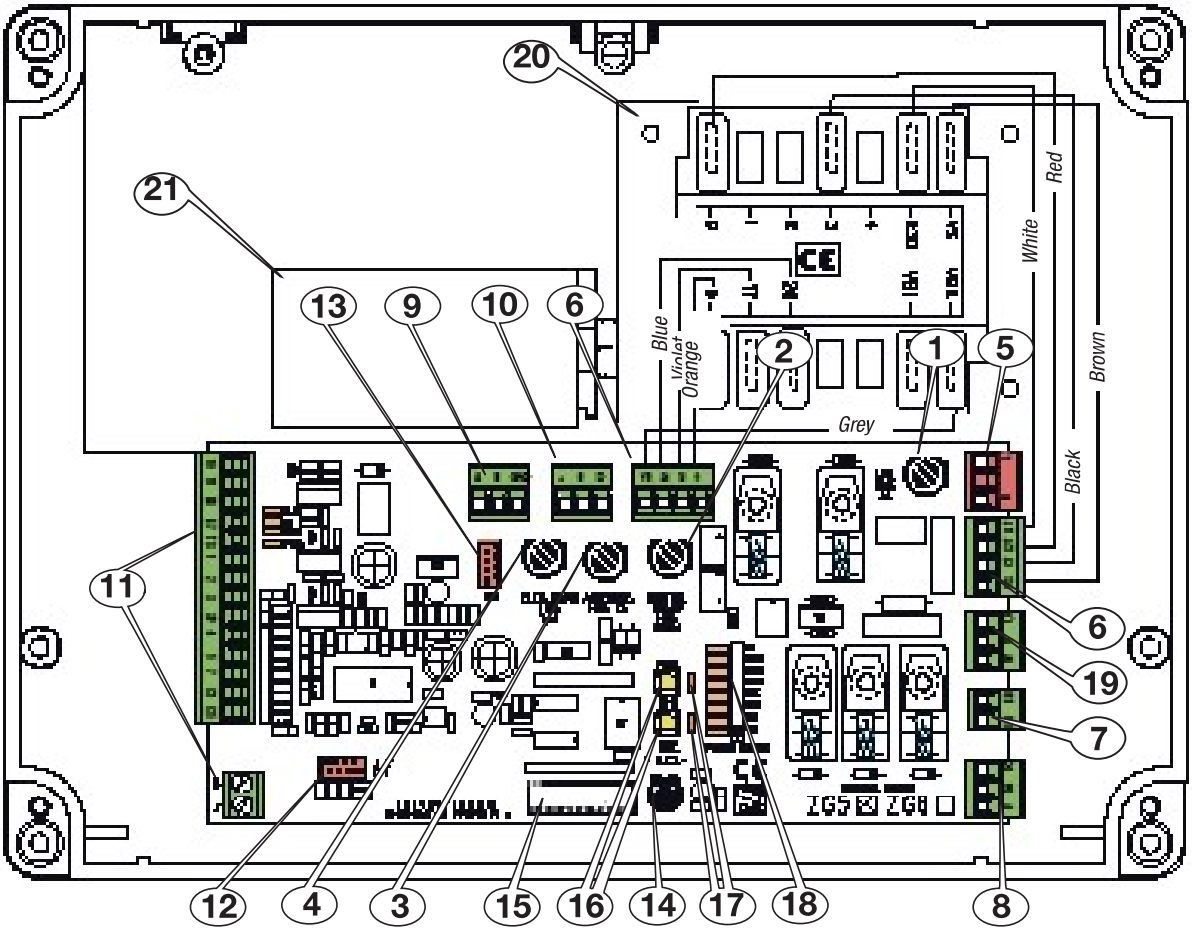

6.2 Electrical connections

Gearmotor, mechanical stops

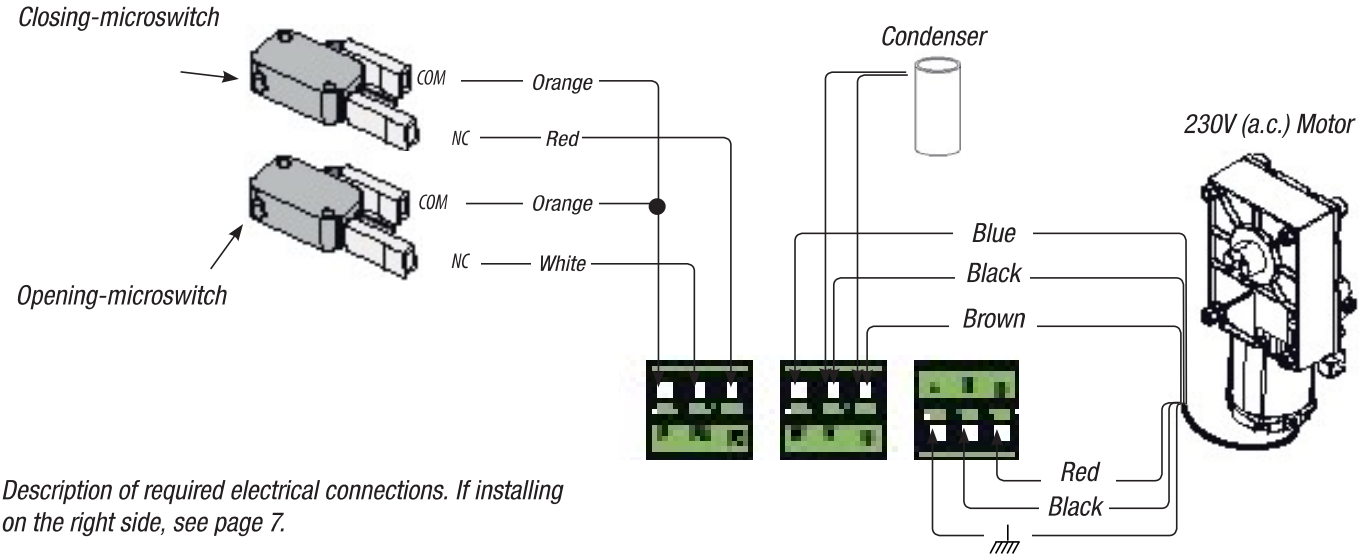

Description of required electrical connections. If installing on the right side, see page 7.

ENGLISH

ENGLISH

Power supply for accessories

- VB2 , 24V electro-block powering (pre-set connection)

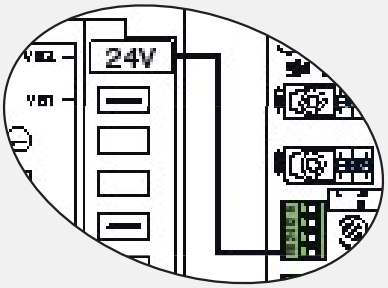

- VB1, 12V electro-block powering

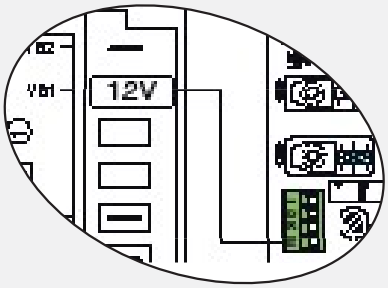

Power out socket for electroblock, activated with opening command.

Terminals for powering the following accessories:
- 24V A.C. normally;
- 24V D.C. when the emergency batteries are working;
Maximum allowed power: 40W

230V (a.c.) Power, 50/60Hz frequency

Cable lug with bolt and washer for connecting to earth

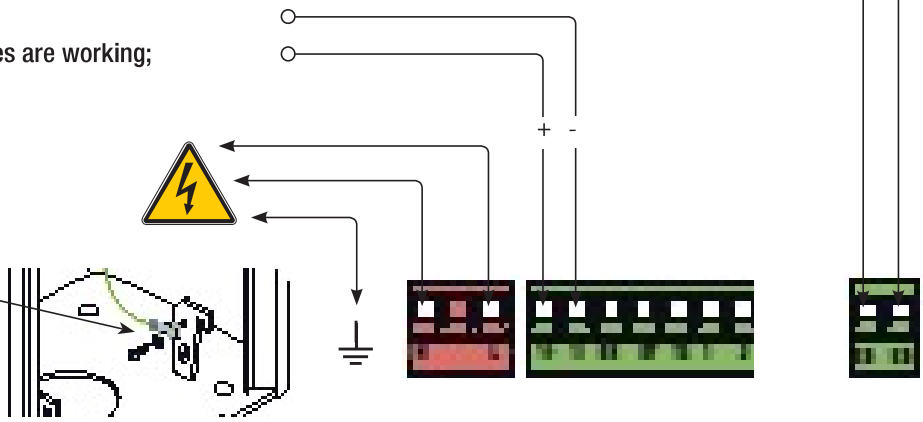

Warning devices

Open barrier warning light (contact rating: 24V – 3W max.)
– Signals when bar is in 'up' position, turns off once bar is down

Flashing Crown (Contact rating: 24V – 8W max.)
– Flashes when bar is opening and closing.

Luminous band (Contact rating: 24V-24W max.)
– Flashes when bar is closed or moving.

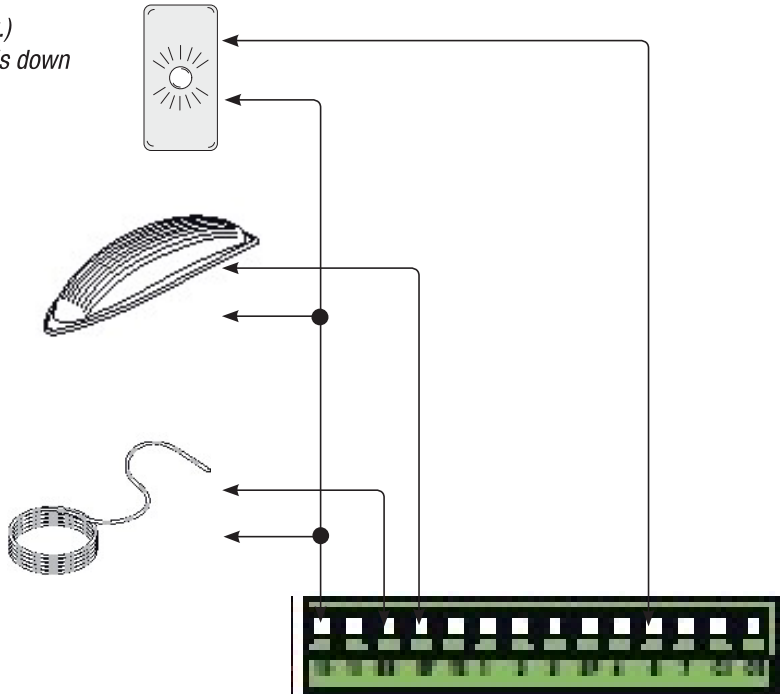

Command devices

Stop button (N.C. Contact) - Bar stop barrier.Excludes automatic closing.
For movement to resume, press the command button or transmitter button. If unused, set Dipswitch 6 to ON.

Opening button (N.O. contact) – Bar opening command.

Opening button (N.O. contact) - Opening command of the MASTER bar with coupled or compass connection.

Closing button (N.O. contact) - Bar closing command. Obligatory in case of "maintained action" function.

Command button (N.O. contact) - Bar opening and closing command. By pushing the button, the bar opens or inverts its movement depending on the selection made on Dipswitch 2.

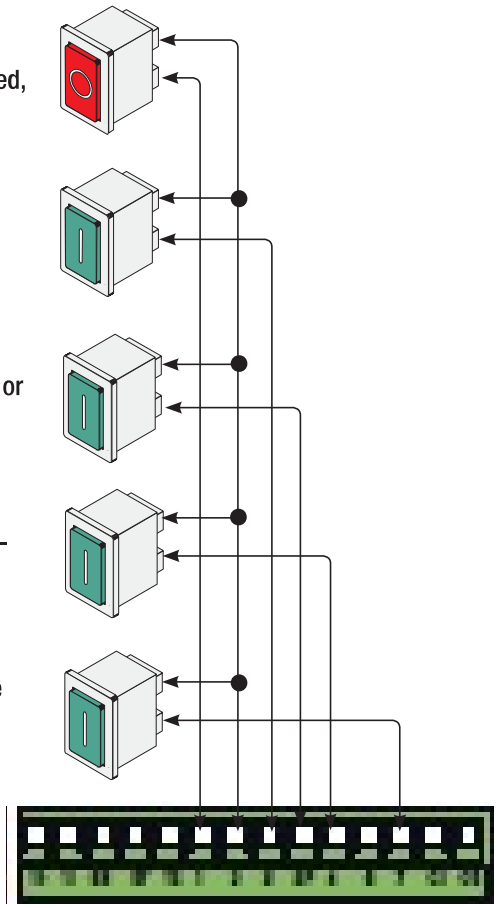

(N.O. contact) for "immediate closing"
- Automatic closing of the bar when obstacle passes in the detection range of the safety devices.

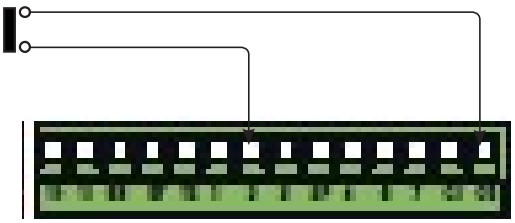

Safety devices

(N.C.) contact for *«re-open during closing phase»*
- input for safety devices such as photocells.

. If contact is opened, while bar is closing, the bar inverts its direction.

If unused, set DIP 7 switch to ON.

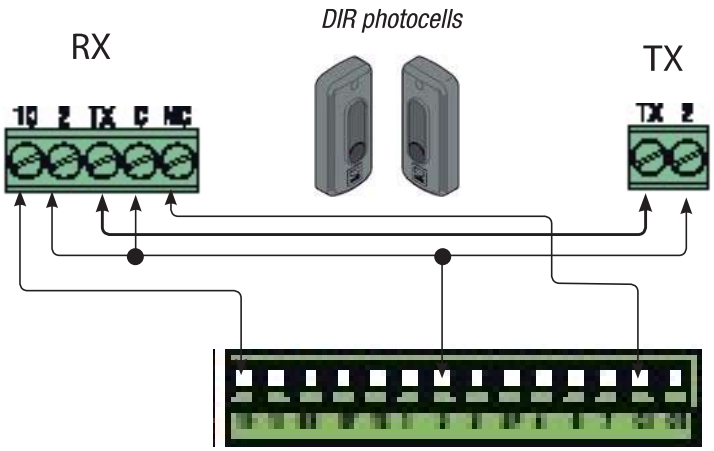

ENGLISH

6.3 Electrical connection to operate the photocells' safety test

Allows the control assembly to check the efficiency of the safety devices (photoelectric cells) after each opening or closing command. A possible photoelectric cell malfunction is identified with via LED indicator flashing on the control panel, consequently cancelling any remote control or pushbutton commands.

Electrical connection for safety test activation:

- photoelectric cell transmitters and receivers must be connected in the following way (see scheme)
- turn dip-switch 8 to ON to carry out the test.

IMPORTANT:

When carrying out the safety test function, contacts N.C. if not used, on the relative dip switches (*see "functions selection" c. 6.9*).

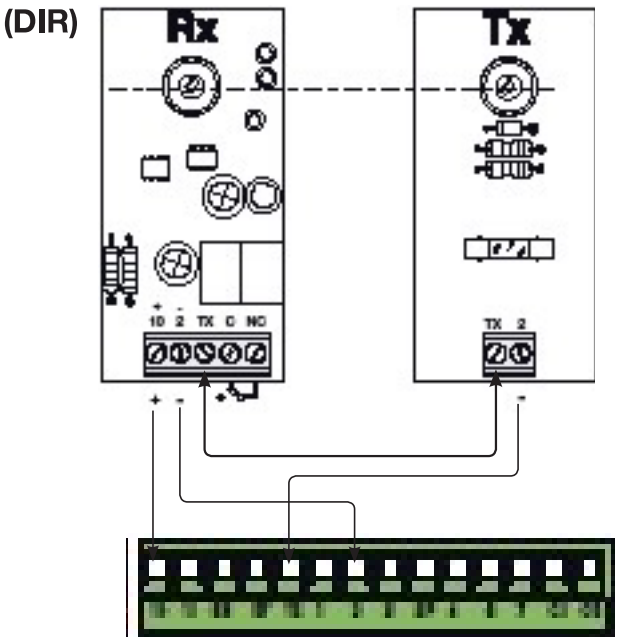

6.4 Motor torque limiter

To vary the motor torque, move the shown faston (the one with the black wire) to one of the 4 positions: 1 min – 4 max.

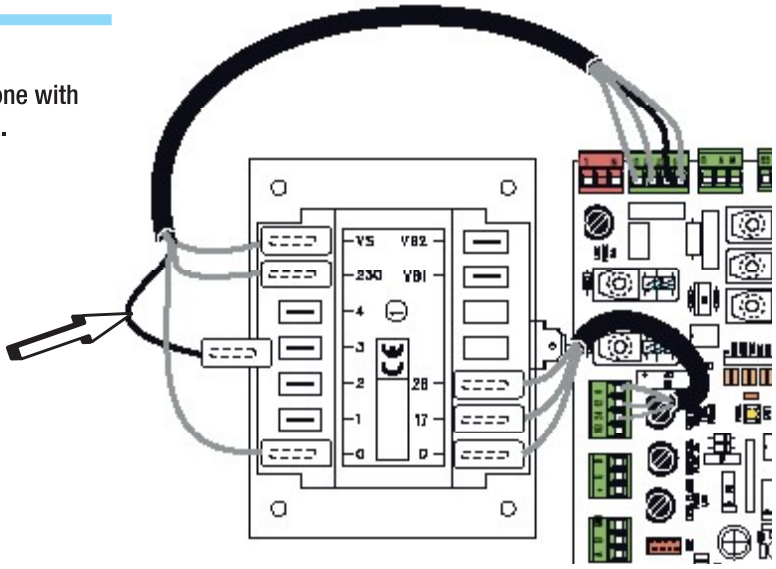

6.5 Managing operational surge

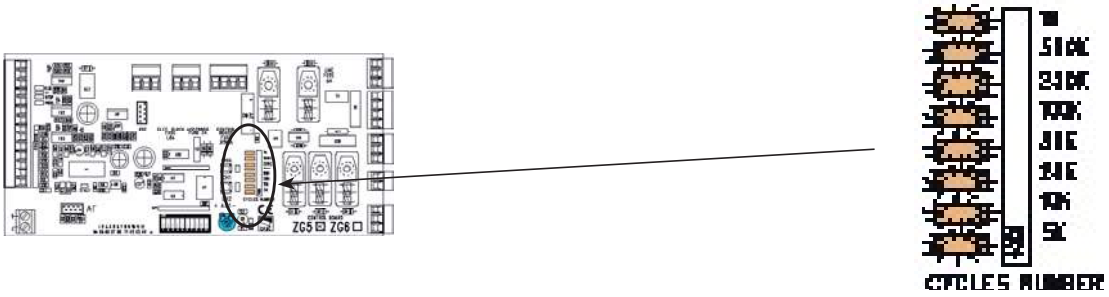

To manage the performance surge, position dip switches n. 1 and n. 3 to ON: all 8 led indicator lights on the performance counter light up.

Reset Dipswitch 3 to OFF and leave Dipswitch 1 in the ON mode, if you want to activate the automatic closing function.

6.6 Operation counter

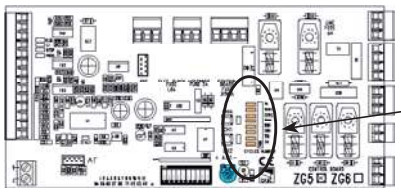

Led n°1 = 5000 operation
Led n°2 = 10000 operation
Led n°3 = 25000 operation
Led n°4 = 50000 operation
Led n°5 = 100000 operation
Led n°6 = 250000 operation
Led n°7 = 500000 operation
Led n°8 = 1000000 operation

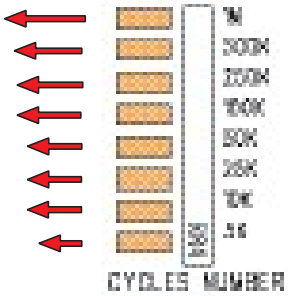

Visual count of the number of gate runs through the 8 LEDs, to zero-set the count, set Dipswitch 1 to OFF (if it is set to ON) and Dipswitch 3 to ON, press CH1 button and wait for all LEDs to turn off. Once zeroed out, reset Dipswitch 1 to ON (if selected) and Dipswitch to OFF.

6.7 Function selector

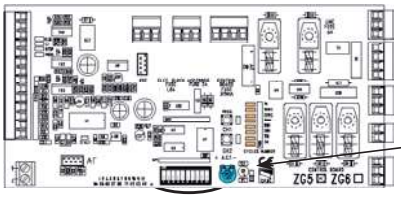

Default Setting

ON

OFF

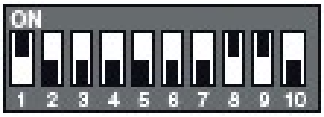

1 ON - Automatic Closing - The automatic closing timer activates at the end of the opening gate run. The pre-set time is adjustable, and is in any case conditioned by the activation of any safety devices, and does not activate after a total safety "stop" or during a blackout (1 OFF - deactivated);

2 OFF - "Open-close" function with [2-7] button and radio transmitter ((fitted with inserted radiofrequency card).

2 ON - "Open only" function with radio transmitter ((fitted with inserted radiofrequency card).

3 ON - Maintained Action – barrier works by keeping the button pressed, one button 2-3 for opening, and one 2-4 for closing (this excludes functioning of the radio transmitter).

4 ON - Pre-flashing while opening and closing – Following an opening or closing command, the flasher and/or luminous crown connected on [10-E7-/10-E6], flashes for 5 seconds before beginning its action.

5 ON - Obstacle detected - When motor is stopped (bar closed or after a total stop command) it prevents any movement if safety devices, such as photocells, detect any obstacles.

6 OFF - Total stop - This function stops the bar and consequently excludes any automatic closing cycle; to set in motion again, use either the keypad or transmitter. Insert the safety device in [1-2]; If unused, set DIP switch to ON.

7 OFF - Opening during closing - If the photocells detect an obstacle during bar is closing, gate motion is inverted until fully opened; connect the safety device to terminals [2-C1]; if unused, set DIP switch to ON;

8 ON - Functioning of the photocells' safety test - Allows the card to check the efficiency of any safety devices (i.e. photocells) after every opening or closing command; (8 OFF deactivated).

9 OFF - Encoder activated – to detect obstacles; (9 ON deactivated)

10 - If unused, set the DIP switch to OFF.

6.8 Settings

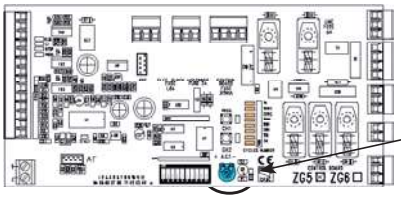

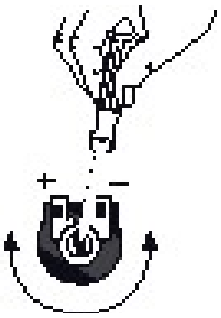

- «A.C.T.» Sets the waiting time while open. Once this time has elapsed, closing automatically takes place. The waiting time may be set from 1 to 120 seconds.

ENGLISH

7 Activating the radio command

ENGLISH

Antenna

Connect the antenna's RG58 cable to the apposite terminals.

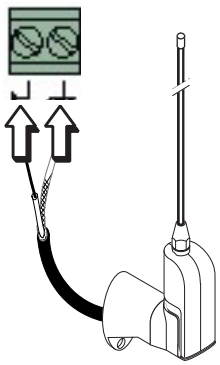

Radiofrequency card

Insert the radio frequency card into the electronic card AFTER DISCONNECTING THE POWER (and disconnecting any batteries).
N.B.: the electronic card picks up the radiofrequency card on when it is running on power.

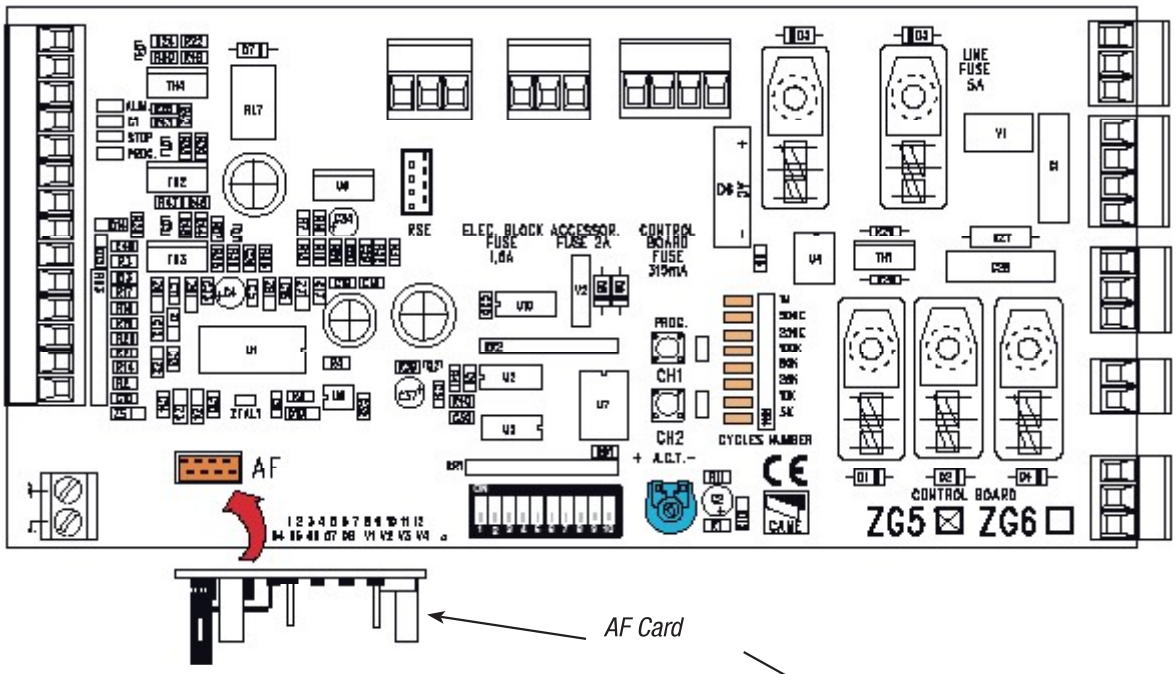

Frequency-MHz	radiofrequency card	Series of transmitters
FM 26.995	AF130	TFM
FM 30.900	AF150	TFM
AM 26.995	AF26	TOP
AM 30.900	AF30	TOP
AM 40.685	AF40	TOUCH
AM 433.92	AF43S / AF43SM	TAM / TOP
	AF43SR	ATOMO
	AF43S / AF43TW	TWIN
AM 868.35	AF868	TOP

ATOMO

AT01 • AT02
AT04

See instruction sheet in AF43SR radiofrequency card box

See attached instructions

TOUCH

TCH 4024 • TCH 4048

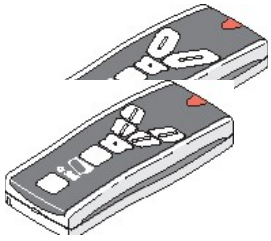

TOP

TOP-432NA • TOP-434NA
TOP-432S

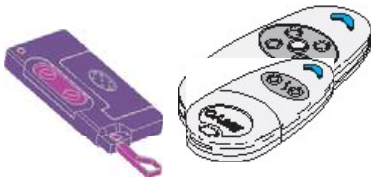

TOP

TOP-432A • TOP-434A

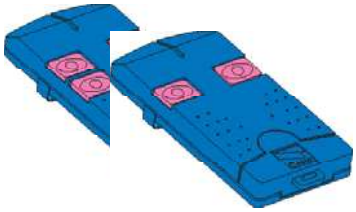

TOP

TOP-302A • TOP-304A

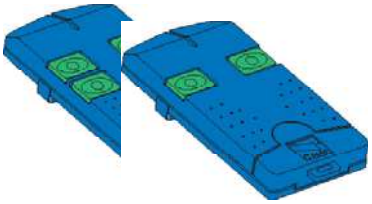

TAM

T432 • T434 • T438
TAM-432SA

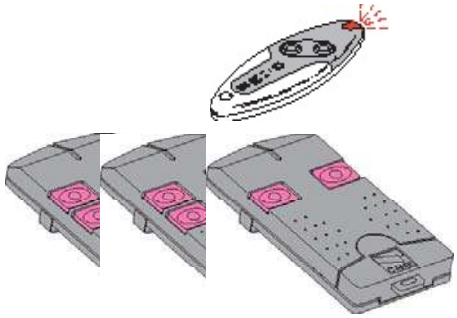

TFM

T132 • T134 • T138
T152 • T154 • T158

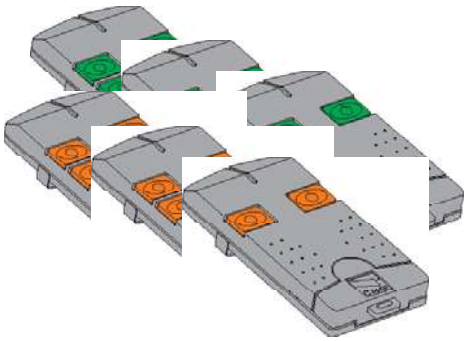

TWIN

TWIN2 • TWIN4

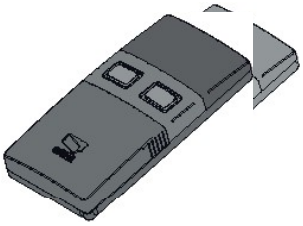

Memorisation

CH1 = Channel for direct command to a function of the the gearmotor's card, ("open only / "open-close" command, depending on the choice made on DIP switch 2).

CH2 = Channel for direct commands with an accessory device (radio control with combined barrier connection or with bush).

- Keep the "**CH1**" button on the electronic card pressed. The LED flashes.

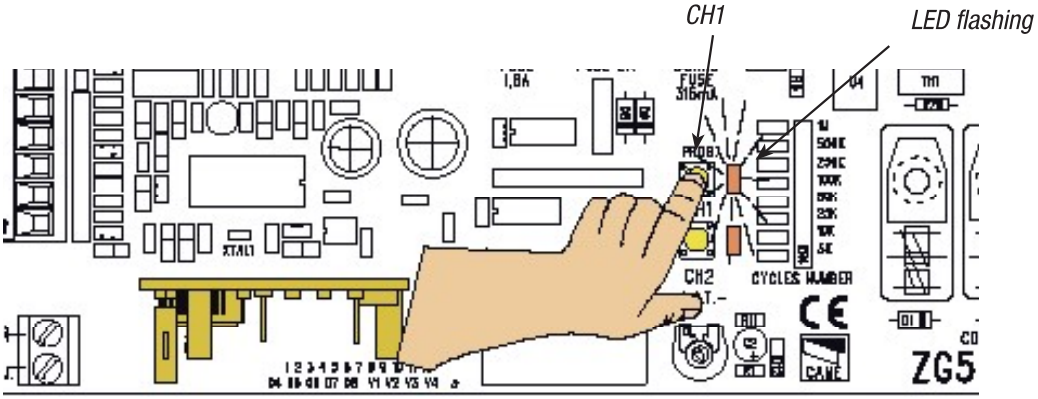

- Press the transmitter button you wish to memorise. The LED will stay on to show memorisation has been successful.

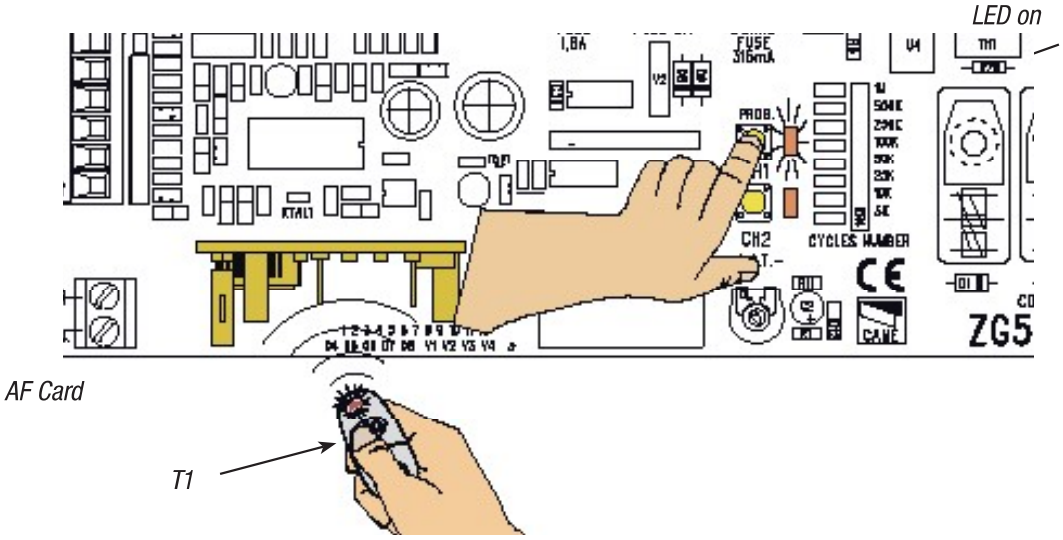

- Repeat the points 1 and 2 procedures for the "**CH2**" button associating this to another button on the transmitter.

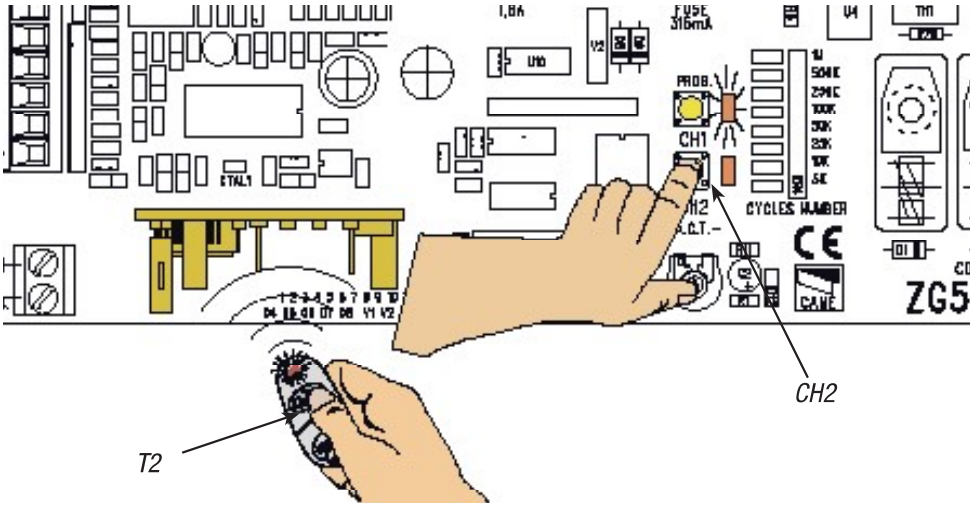

8 Safety instructions

Important safety instructions

This product must only be employed for its originally intended use. Any other use is wrong and potentially dangerous. The manufacturer cannot be held liable for any damages resulting from wrongful, erroneous or negligent uses.
Avoid using near mechanical moving parts. Stay out of the opening/closing arc when operator is in motion.
Do not exercise force against the motion of the operator as this could result in potentially dangerous situations.

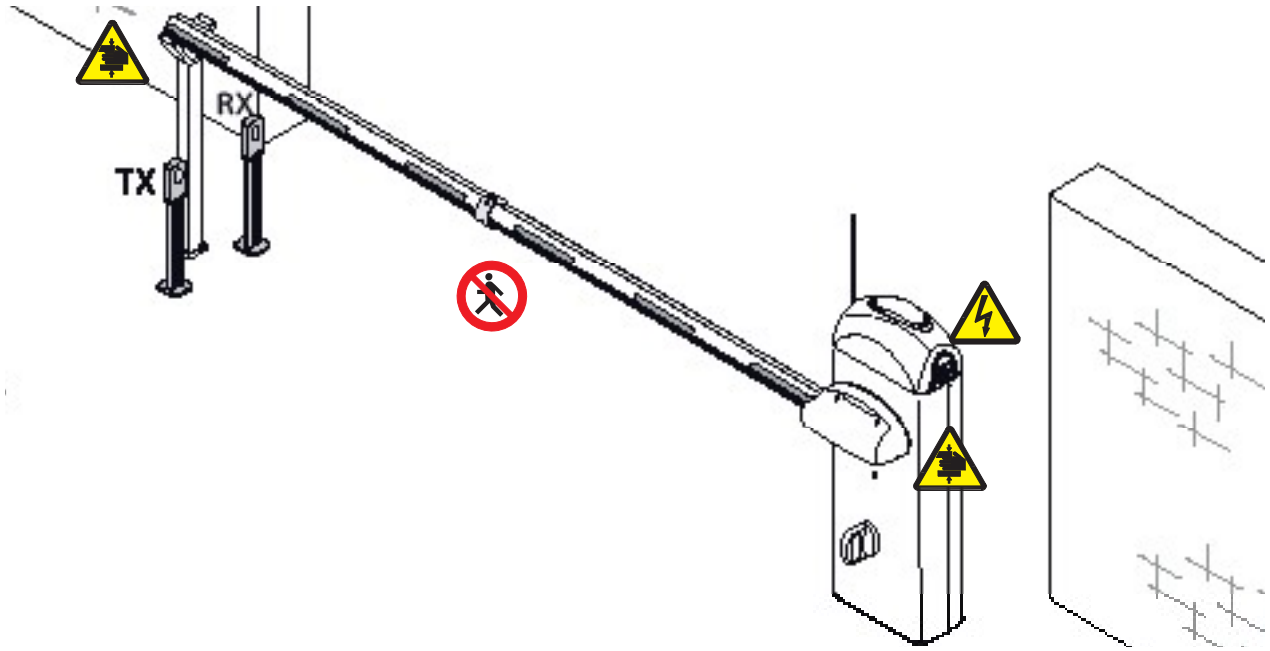

Do not allow children to play or loiter within the opening/closing arc of the operator. Keep remote controls and any other command device out the reach of children, to prevent operator from being activated by accident.
In the event of anomalous behaviour, stop using the operator immediately.

Danger of crushing hands

Danger! High voltage

No transit during operation

9 Maintenance

9.1 Periodic maintenance

Periodic maintenance to be carried out by the end-user is as follows: wipe clean the glass surface of the photocells; check that the safety devices work properly; remove any obstructions.
We suggest checking the state of lubrication and tightness of the anchoring screws on the operator.

-To check the efficiency of the safety devices, move an object in front of the photocells when gate is closing. If the operator inverts the motion or stops, the photocells are working properly.

This is the only maintenance procedure to be carried out with the power source connected.

-Before performing any maintenance procedures, cut off the main power, to prevent possible accidents due to gate movement.
-To clean the photocells use a water dampened cloth. Do not use solvents or other chemical products which may ruin the devices.
-In the event of any strange vibrations or squeaking, lubricate the joints with grease, as shown in the diagram.

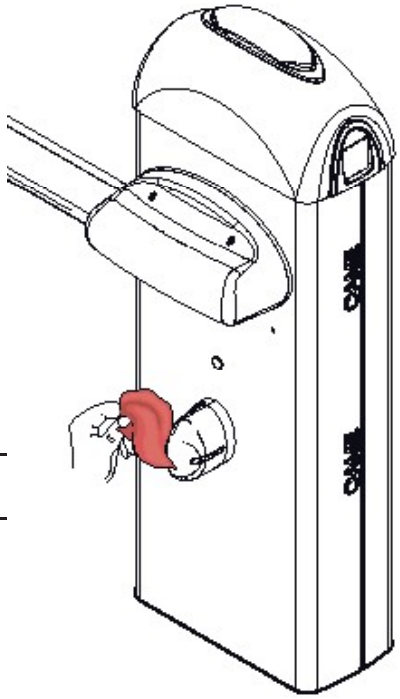

ENGLISH

Periodic maintenance log for end-user (every 6 moths)

Date	Notes	Signature

9.2 Extra-ordinary maintenance

The following table serves to note down any extraordinary maintenance, repairs or improvements performed by specialised firms.
N.B.: Any extraordinary maintenance must be performed by specialised technicians.

Extra-ordinarymaintenancelog

Installer's stamp	Operator name
	Date of job
	Technician's signature
	Requester's signature
Job performed _____	

Installer's stamp	Operator name
	Date of job
	Technician's signature
	Requester's signature
Job performed _____	

Installer's stamp	Operator name
	Date of job
	Technician's signature
	Requester's signature
Job performed _____	

Installer's stamp	Operator name
	Date of job
	Technician's signature
	Requester's signature
Job performed _____	

Installer's stamp	Operator name
	Date of job
	Technician's signature
	Requester's signature
Job performed _____	

Installer's stamp	Operator name
	Date of job
	Technician's signature
	Requester's signature
Job performed _____	

ENGLISH

9.3 Problem solving

MALFUNCTIONS	REFERENCES	CHECKS
The unit neither opens nor shuts	1-2-3-4-6-8-20	1 - Use key to lock trap door
The unit opens but does not close	4-7-10	2 - Disable “steady movement” with dipswitch
The unit shuts but does not open	4-7-9	3 – Check power supply and fuses
No automatic closure	11-12-13	4 - N.C. safety contacts open (1-2 / 2-C1)
The unit does not work if the remote control is used	2-14-16	6 - Disable master-slave function
The unit inverts direction	7	7 – Check spring tension and balancing
The unit works only with remote control	22	8 – Disable obstacle detection with dipswitch
The photoelectric cell does not react	12-23-24	9 – Check if end stop opens
The signalling LED indicator flashes rapidly	4	10 – Check if end stop closes
The signalling LED indicator remains on	13	11 - Activate “automatic closure” dip switch
The unit does not end its run	7	12 – Check the correct direction of movement
The bar is not properly balanced	7-15	13 - (2-3 / 2-4 / 2-7) command button
		14 -Check jumper on AF43S, turn on/off power
		15 – Check the bar length ratio with mountable accessories
		16 – Re-save radio code
		20 - Raise the motor torque
		22 - Enter or duplicate the same code in all the remote controls
		23 - Activate the photoelectric cell with the dipswitch
		24 - Connect the photoelectric cells in a series, not in parallel

10 Demolition and disposal

In its premises, CAME CANCELLI AUTOMATICI S.p.A. implements an Environmental Management System certified in compliance with the UNI EN ISO 14standard to ensure environmental protection.
Please continue our efforts to protect the environment—which CAME considers one of the cardinal elements in the development of its operational and market strategies—simply by observing brief recommendations as regards disposal:

DISPOSAL OF PACKAGING
I The packaging components (cardboard, plastic, etc.) are all classifiable as solid urban waste products and may be disposed of easily, keeping in mind recycling possibilities.
Prior to disposal, it is always advisable to check specific regulations in force in the place of installation.
PLEASE DISPOSE OF PROPERLY!

PRODUCT DISPOSAL
IOur products are made up of various types of materials. Most of them (aluminium, plastics, iron, electrical wires, etc.) may be disposed of in normal garbage collection bins and can be recycled by disposing of in specific recyclable material collection bins and disposal in authorized centres. Other components (electrical boards, remote control batteries, etc.), however, may contain polluting substances. They should therefore be removed and given to qualified service companies for proper disposal.
Prior to disposal, it is always advisable to check specific regulations in force in the place of disposal.
PLEASE DISPOSE OF PROPERLY!

DECLARATION OF INCORPORATION

(Annex. IIB Dir.2006/42/CE)

CAME

Came Cancelli Automatici s.p.a.

address Via Martiri della Libertà Street n. 15 postal code 31030
location Dosson di Casier province Treviso state Italia

DECLARES THAT THE PARTLY COMPLETED MACHINERY

AUTOMATIC ROAD BARRIERS

G2080Z; G2080IZ; G2081Z;
G4040Z; G4040IZ; G4041Z;
G2500; G2500N; G2510;
G3250; G3750; G3751;
G3000DX; G3000SX; G3000IDX; G3000ISX;
G4000C; G4000D; G4000E; G4000N; G4001; G4001E; G4010; G4011;
G6000; G6000B; G6000E; G6001; G6001E; G6010; G6011;
G6500; G6501;
G12000; G12000A; G12000S
G02040; G04060; G06080
G02801; G02803;
G03755DX; G03755SX

MEET THE APPLICABLE ESSENTIAL REQUIREMENTS

1.1.3 - 1.1.5 - 1.2.1 - 1.2.2 - 1.3.2 - 1.3.7 - 1.3.8.1 - 1.4.1 - 1.4.2 - 1.4.2.1 - 1.5.1 - 1.5.6 - 1.5.8 - 1.5.9 - 1.5.13 - 1.6.1 - 1.6.3 - 1.6.4 - 1.7.1 - 1.7.2 - 1.7.4

COMPLIES WITH THE PROVISIONS OF THE FOLLOWING DIRECTIVES

DIRECTIVE 2006/42/EC OF THE EUROPEAN PARLIAMENT AND OF THE COUNCIL
of 17 May 2006 on machinery, and amending Directive 95/16/EC.

DIRECTIVE 2004/108/EC OF THE EUROPEAN PARLIAMENT AND OF THE COUNCIL
of 15 December 2004 on the approximation of the laws of the Member States relating to electromagnetic compatibility.

PERSON AUTHORISED TO COMPILE THE RELEVANT TECHNICAL DOCUMENTATION

Came Cancelli Automatici s.p.a.

address Via Martiri della Libertà Street n. 15 postal code 31030
location Dosson di Casier province Treviso state Italia

The pertinent technical documentation has been drawn up in compliance with attached document IIB

Came Cancelli Automatici S.p.A., following a duly motivated request from the national authorities, undertakes to provide information related to the quasi machines,

and FORBIDS

commissioning of the above mentioned until such moment when the final machine into which they must be incorporated, has been declared compliant, if pertinent, to 2006/42/CE.

Dosson di Casier (TV)
01 Feb 2011

Gianni Michielan
Managing Director

DDI B EN **G001** *ver. 4.2 01 Febraury 2011*
Translation of the Declaration in the original language

Came Cancelli Automatici s.p.a.
Via Martiri della Libertà, 15 - 31030 Dosson di Casier - Treviso - Italy - Tel. (+39) 0422 4940 - Fax (+39) 0422 4941
info@came.it - www.came.com
Cap. Soc. 1.610.000,00 € - C.F. e P.I. 03481280265 - VAT IT 03481280265 - REA TV 275359 - Reg Imp. TV 03481280265

CAMEGROUP

English *- Manual code:* ***119GU44*** *ver.* ***0.4*** *01/2012 © CAME cancelli automatici s.p.a.*
The data and information reported in this installation manual are susceptible to change at any time and without obligation on CAME cancelli automatici s.p.a. to notify users.

CAME

CAME.COM

CAME S.P.A.
Via Martiri Della Libertà, 15
31030 Dosson di Casier - Treviso - Italy
tel. (+39) 0422 4940 - fax. (+39) 0422 4941

Manual code ***FA01075-EN*** *- ver.* ***1*** *- 01/2018 - © CAME S.p.A. - The contents of this manual may be changed at any time without prior notice.*

Installation & Configuration Guidance of H8 ANPR Camera

Preface

(1) Product Portfolio:

IP Camera:

iDS-2CD7A26G0/P-IZHSY (C) --Support Wiegand
iDS-2CD7A46G0/P-IZHSY (C) --Support Wiegand
iDS-2CD7026G0/EP-IHSY(C)
iDS-2CD7046G0/EP-IHSY(C)

DVR:

iDS-72XXHUHI-M/S

NVR:

DS-xxxxNI-I
iDS-xxxxNXI-I

Chapter 1 Installation

(1) It is recommended to cover no more than 2 lanes for each ANPR camera;

(2) Select the appropriate lens according to following table:

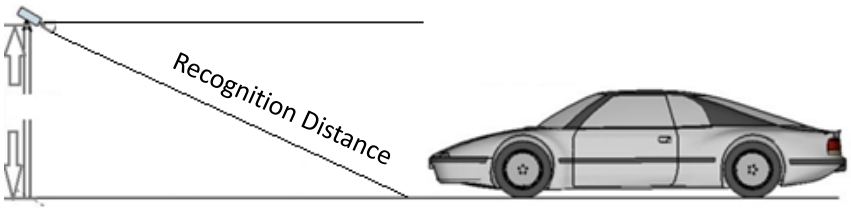

Lens (mm)	Min recognition distance (m)	Max recognition distance (m)
2.8~12	2	18
8~32	6	48
3.8~16	3	24
11~40	8	60

(3) Choose installation height accordingly (**when pitch angle is 30°**):

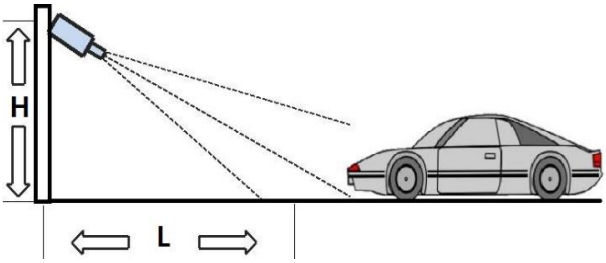

Type	Height(m)	Min L (m)
Entrance/Exit	1.5	2.5
	2	3.5
City Street	3	5
	4	7
	5	8.5
	6	10

Entrance/Exit

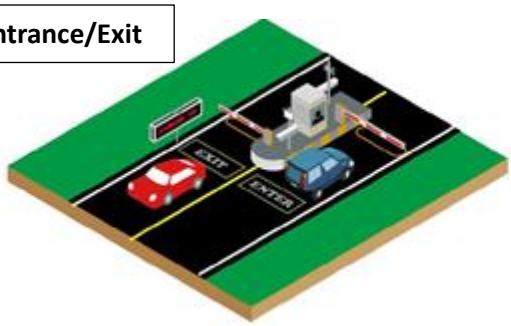

City Street

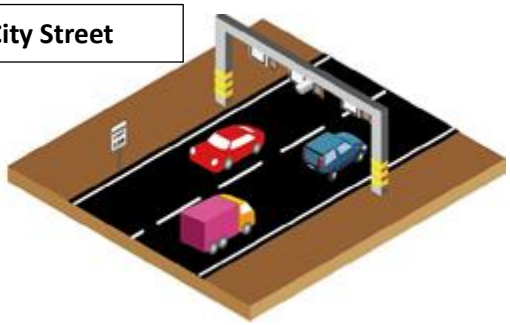

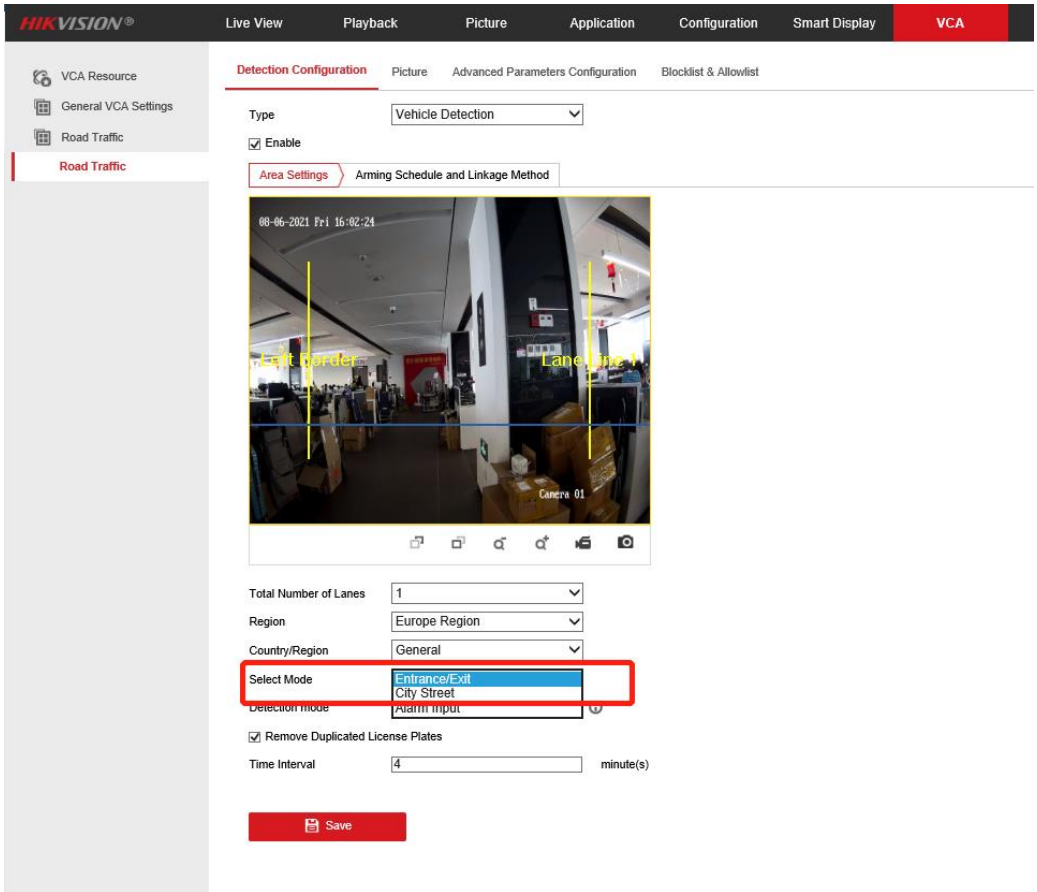

(4) The pitch angle (the angle between camera-vehicle line and the road) should be larger than 15° and less than 30°

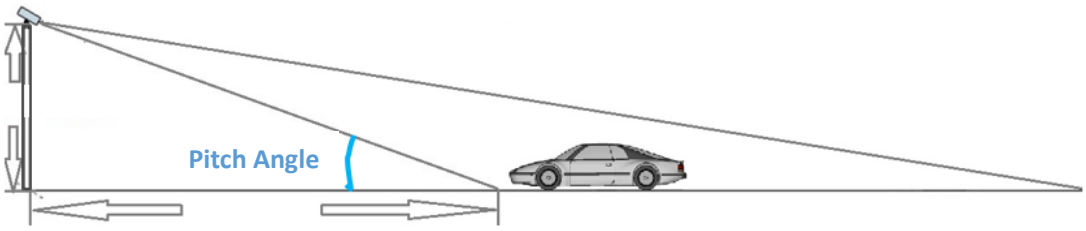

Example:

Too small	*Too large*	*OK*

(5) The angle between the vehicle-moving direction and the vertical direction should be less than 30°

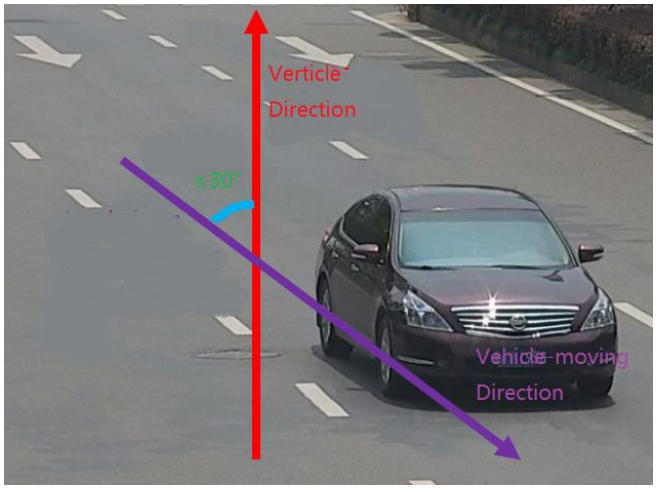

Example:

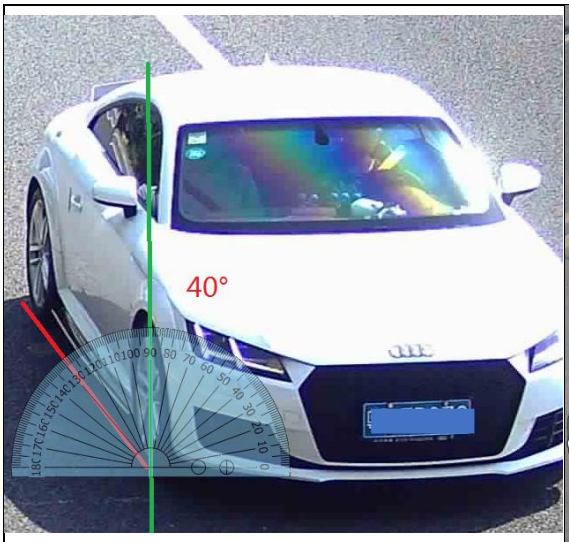	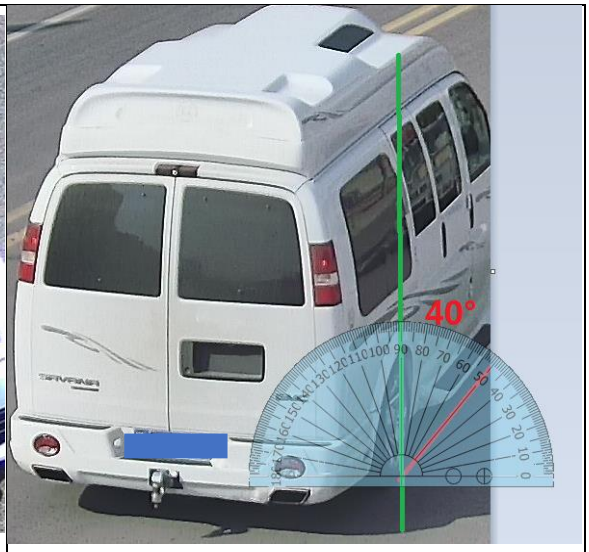
>30°, too large	*>30°, too large*

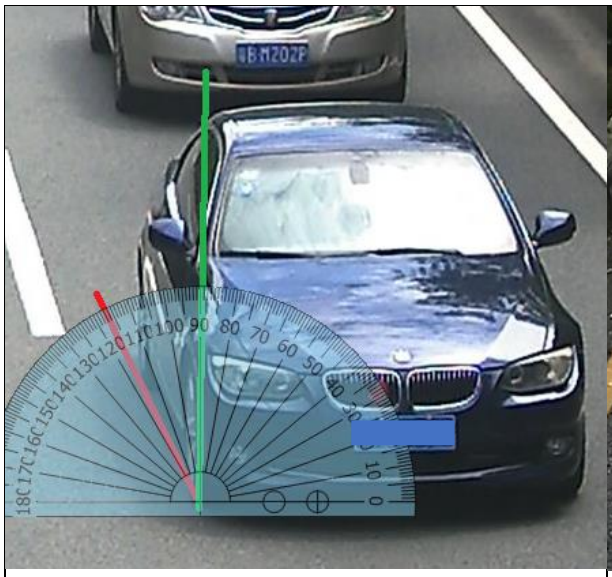	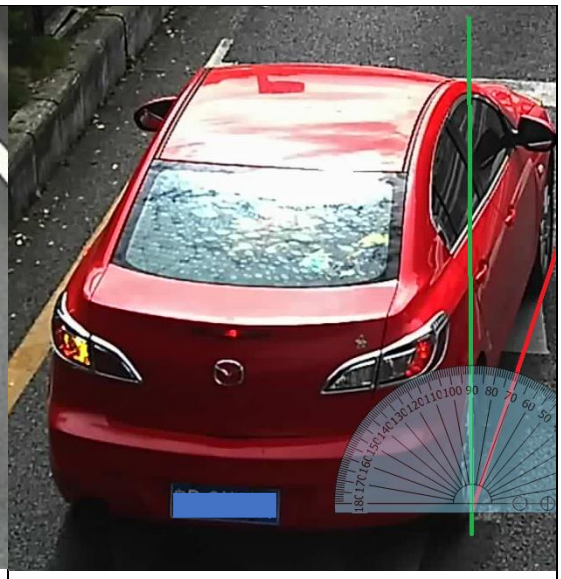
<30 ° OK	*<30 ° OK*

(6) The pixels of following objects need to satisfy:

	Plate Characters Recognition
2 MP Camera	20<Height<30 100<Width<200
4 MP Camera	27<Height<40 135<Width<270

Chapter 2 Confi

circumscribed rectangle

(1) Go to Image>Display Settings>Day/Night Switch and set the Day/Night Switch to the “Triggered by Video”;

short edge

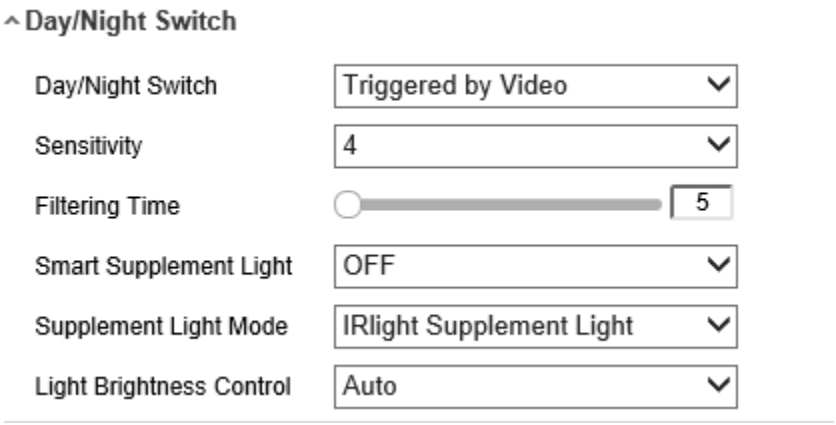

(2) Go to Image>Display Settings to change Exposure Time and Gain according to the standard below (the Gain control can be operated only after step 1 is finished):

Speed < 30km/h — Exposure Time : **1/150-1/200**;

30km/h < Speed < 60km/h — Exposure Time : **1/250-1/500**;

60km/h < Speed — Exposure Time : **1/500-1/1000**

Gain : Generally set as **20** and we usually don't change this.

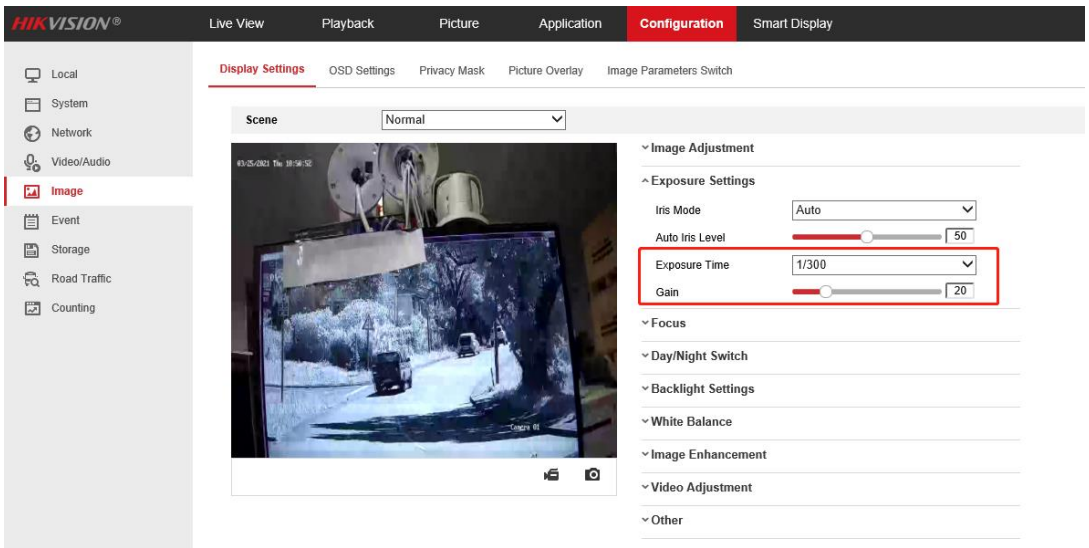

(3) Make sure the Focus Mode is semi-auto.

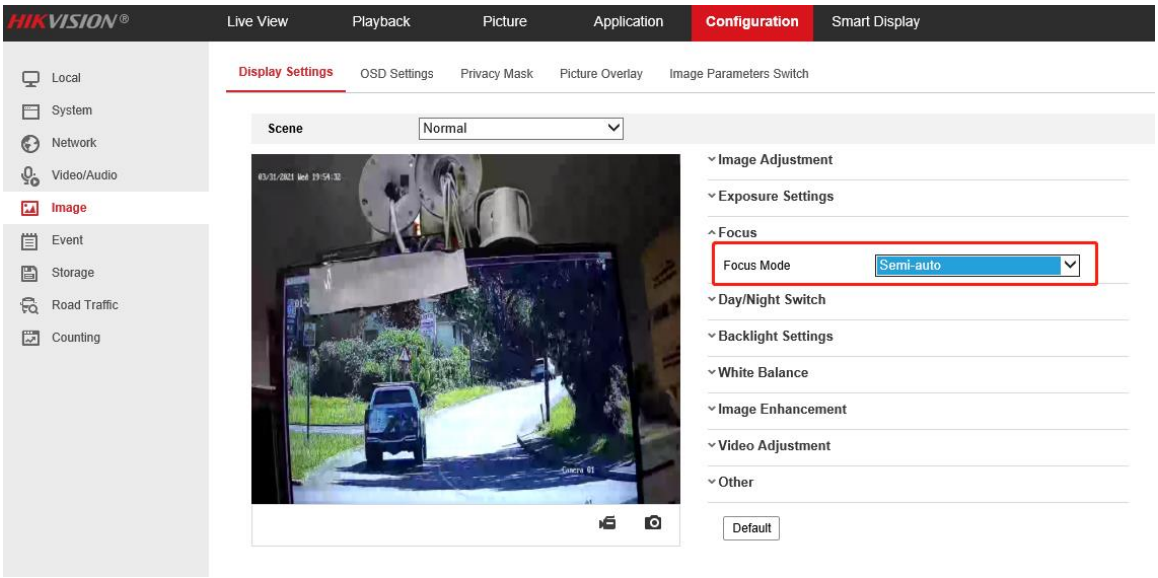

If the image effect is not satisfied:

a. Choose the pre-settings Scene and the referring using scenario to try whether the effect is getting better.

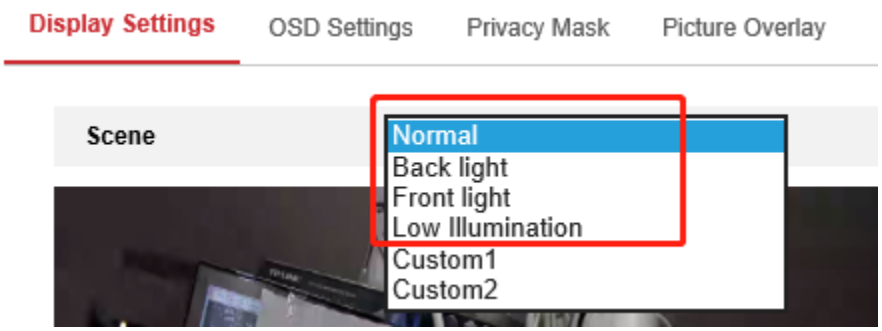

b. WDR or HLC will make the image easier to perform the “ghost image” or detail lost. So if the strong light can be solved by the exposure and gain settings, we don’t recommend you enable these to counter strong lights.

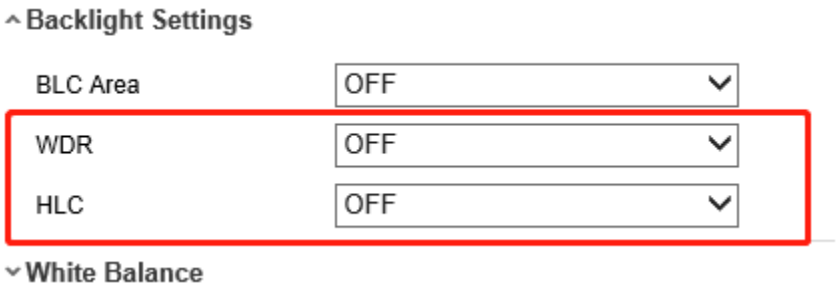

c. Double check whether the installation angle is smaller than 30° and the

installation height satisfy the full observation of full scale of vehicle.

(4) Go to Picture to choose the text overlay on the picture as the scenario needs;

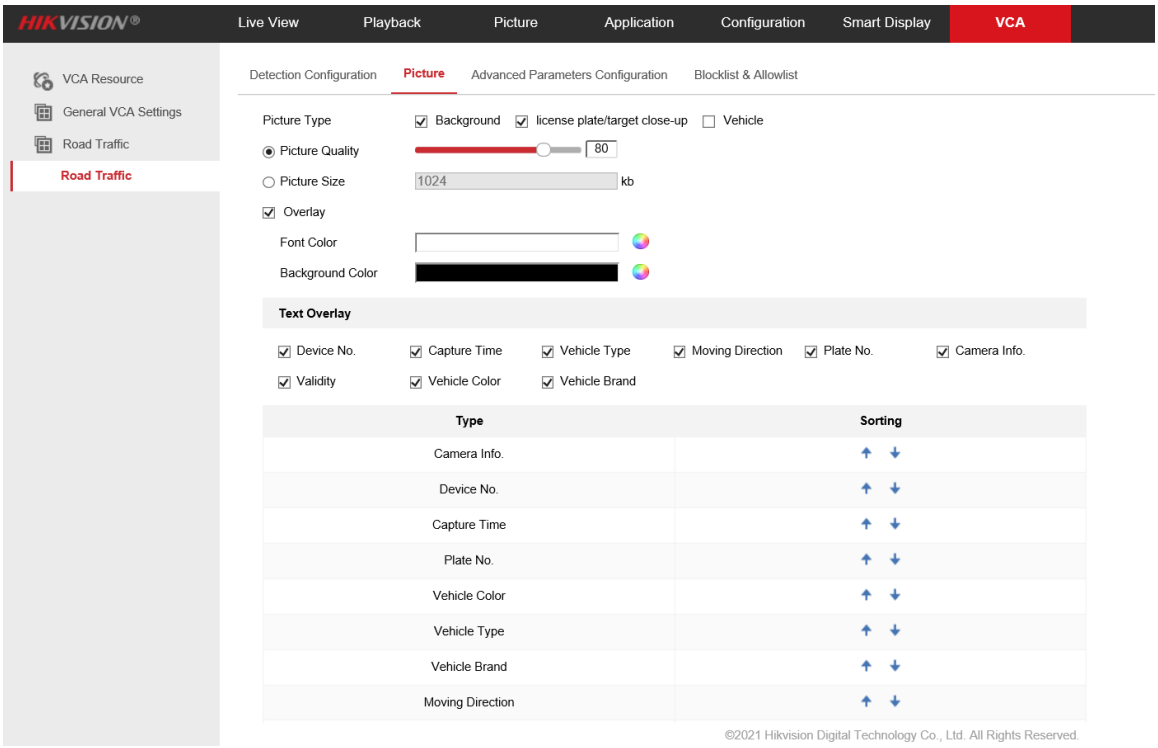

(5) Go to Road Traffic to select detection type;

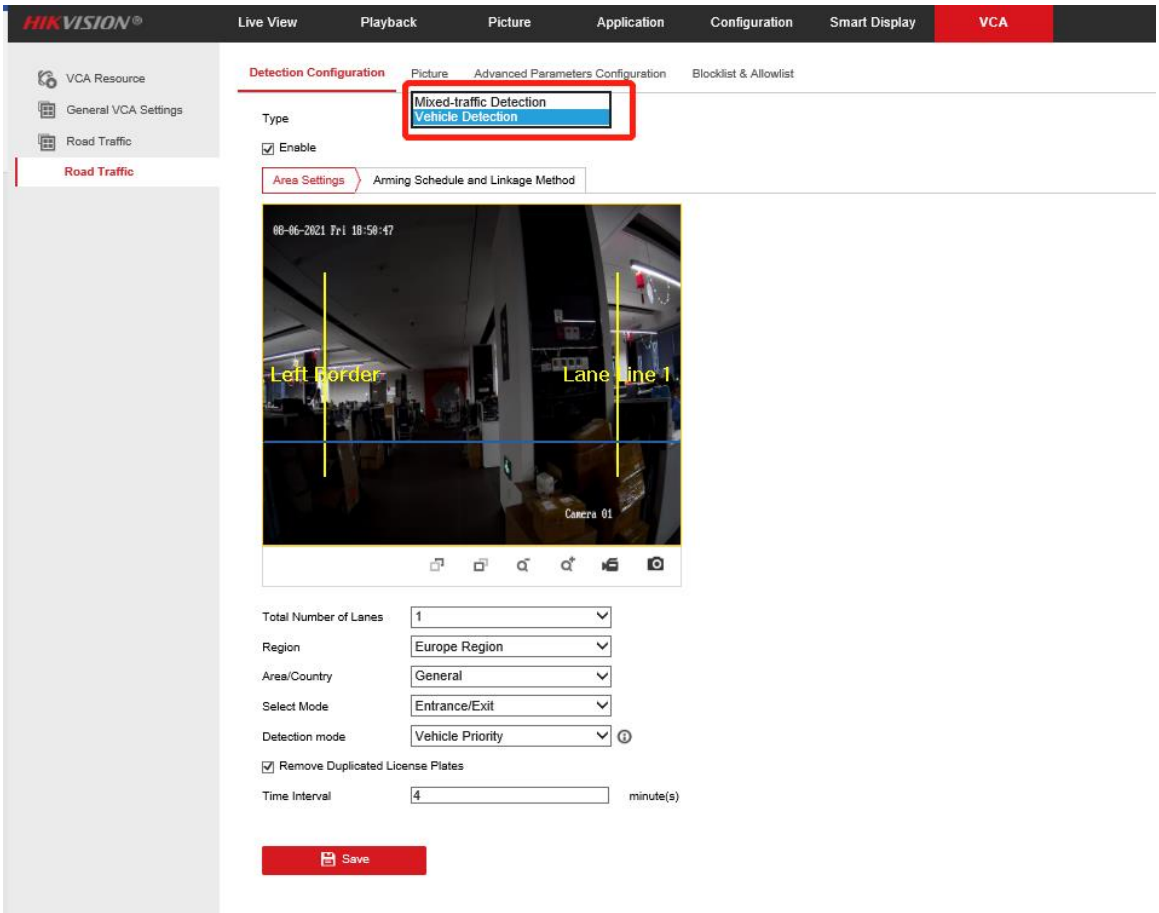

Detection type can be set as Vehicle detection or Mixed-traffic Detection.

- **Vehicle detection**: the passed vehicle can be detected and the picture of its license plate can be captured.
- **Mixed-traffic Detection**: motor vehicle and non-motor vehicle can be detected, and the picture of the object or license plate can be captured

(6) Go to Road Traffic to select lane numbers (1~2) and traffic mode;

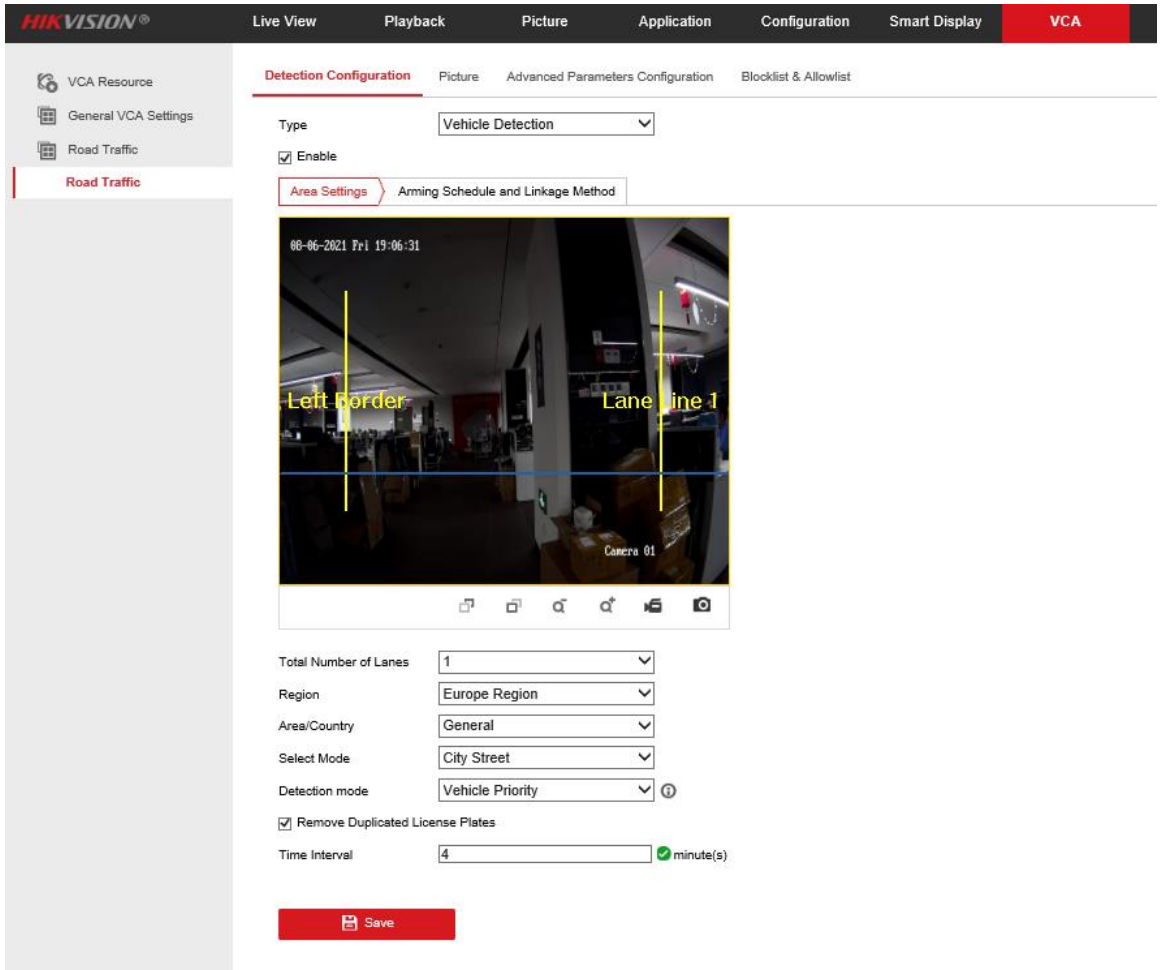

(7) Area Settings:

Blue Detection Line: Mainly used for Entrance/Exit with a purpose of improving the capture efficiency. The line is the trigger line of license plate and we highly recommend you put it middle-lower of the screen to make sure the car can pass it with the plate and the full scale.

Detecting Area: The Actual detect area is the 2 yellow lane and the square they seized.

(8) Select Mode:

Entrance/Exit: It means the camera is set to monitor the Entrance & Exit and will get a better performance at this scenario. Also, E&E mode only supports 1 lane.

City Street: It means the license plate information of the detected vehicle will

be uploaded when the vehicle passes the detection area and triggers the detection. City Street can support 2 lanes.

Alarm Input: It means the input alarm will trigger a license plate capture and recognition action.

(9) Detection Mode:

Vehicle priority mode: the classic mode of the ANPR camera, it will detect the vehicle scale first, then catch the plate out to make the analysis. It will get the better accuracy but sometimes it will lose some results in the not-satisfied installation scenario. When choosing this mode, the City Street mode is recommended.

License plate or Vehicle mode: this mode will allow the ANPR camera to capture the vehicle plate simultaneously with the scale of vehicle is detected. This mode will greatly improve the recognition at some not-satisfied installation scenario. When choosing this mode, the Entrance/Exit mode is recommended.

So we recommend you to use ***Vehicle priority mode first*** *if there is no issues on installation and filling lights. After the issues of plate recognition is carried out, you can* ***switch the mode to License plate & Vehicle mode.***

(10) Go to Arming Schedule and Linkage Method to continue:

Here you can set the arming schedule and linkage action independently for allow list, block list and other list, so you need to set them one by one;

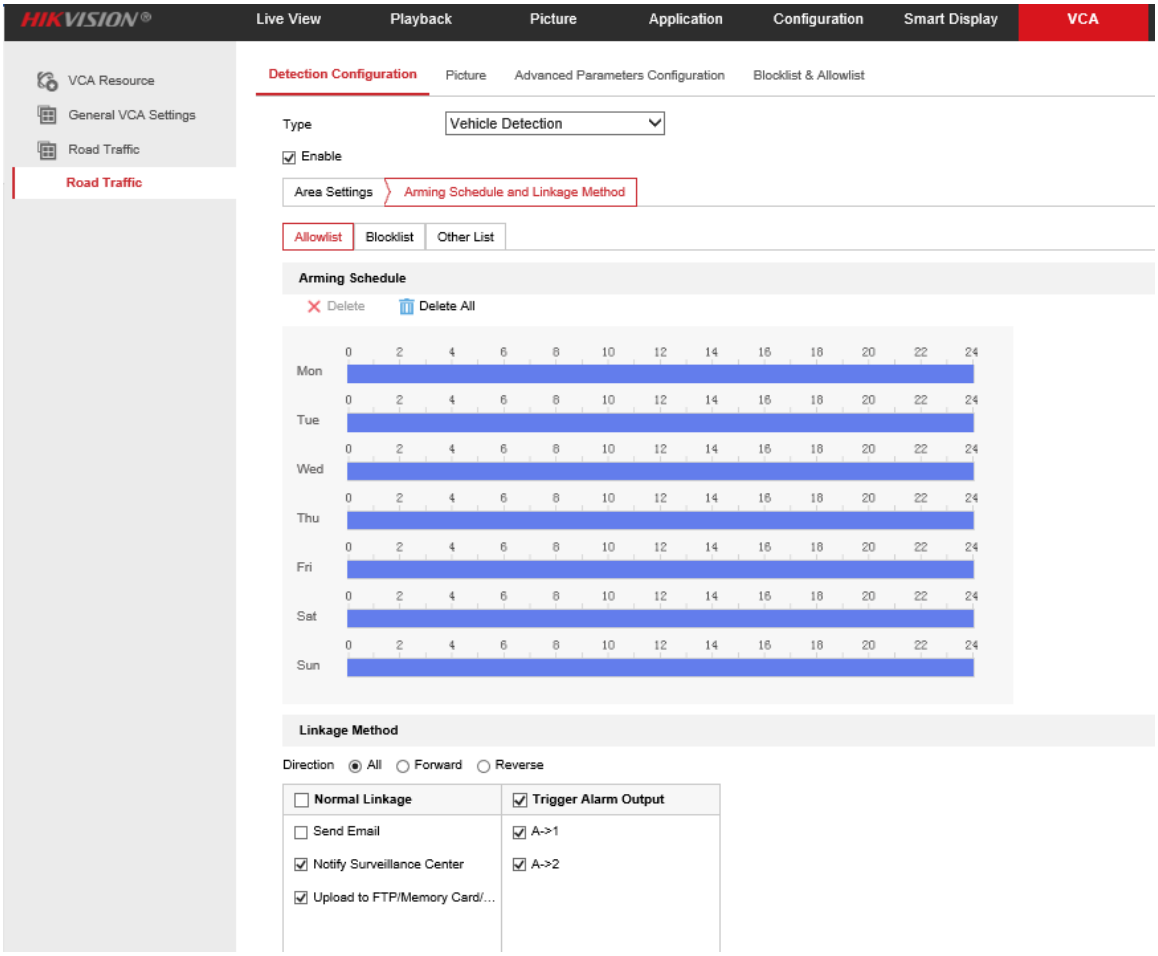

(11) Select a direction here. The Forward means vehicle moves toward the camera; Reverse means vehicle moves away from the camera. Only the vehicles moving as the selected direction can trigger selected linkage methods. We highly recommand you choose All if there is no special use;

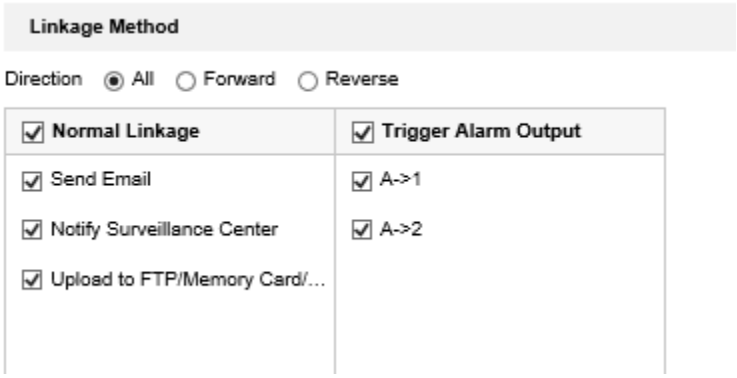

(12) You can set linkage here, including Send Email, Notify Survelliance Center or Upload to FTP/xxxx;

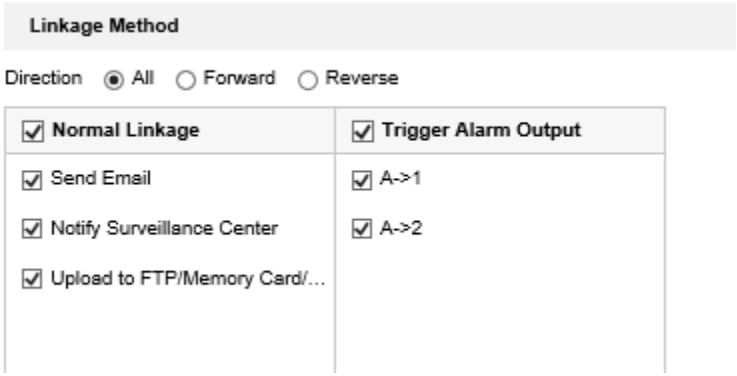

(13) The last part is to import the blocklist and allowlist. If you don't have such a list in advance, export the template first to make one;

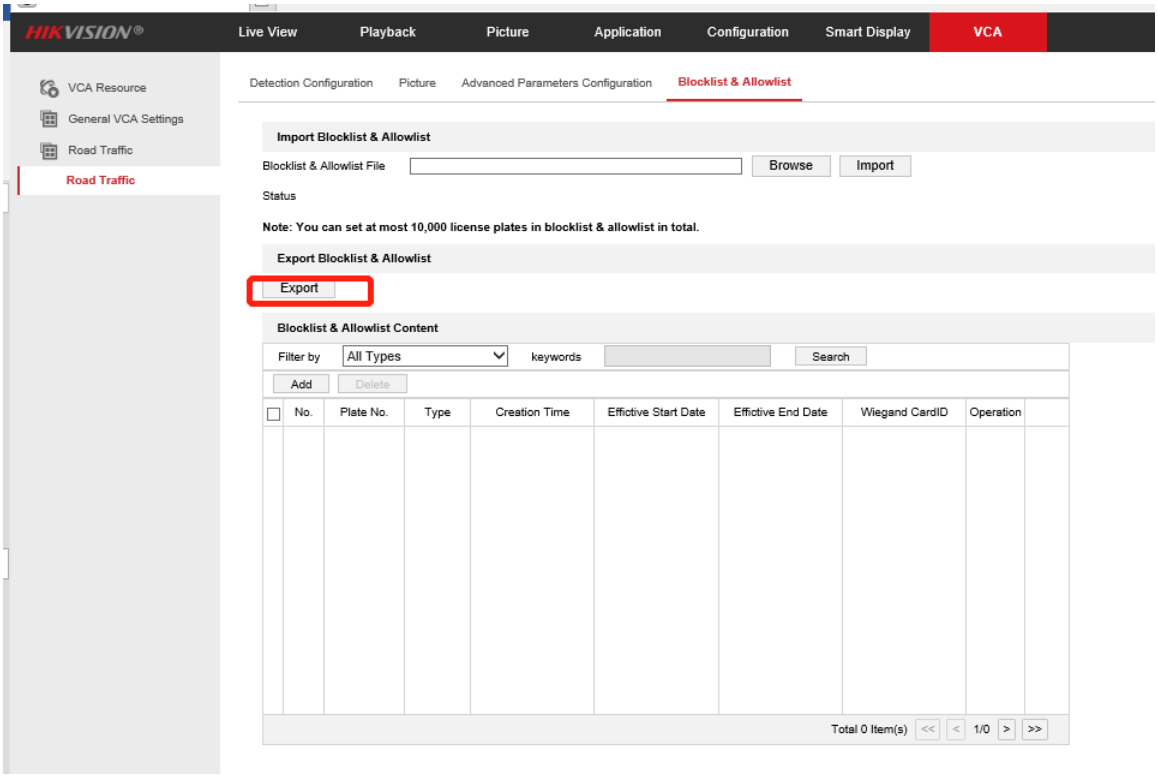

The template looks like this:

(when inputting the plate number, input several consecutive numbers/letters with no blank included.)

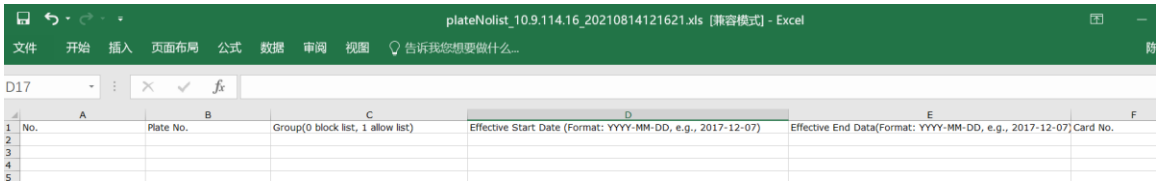

(14) After the configuration is done, when there are vehicles passing, you can check the real-time plate recognition results on [Smart Display] on the camera's web page.

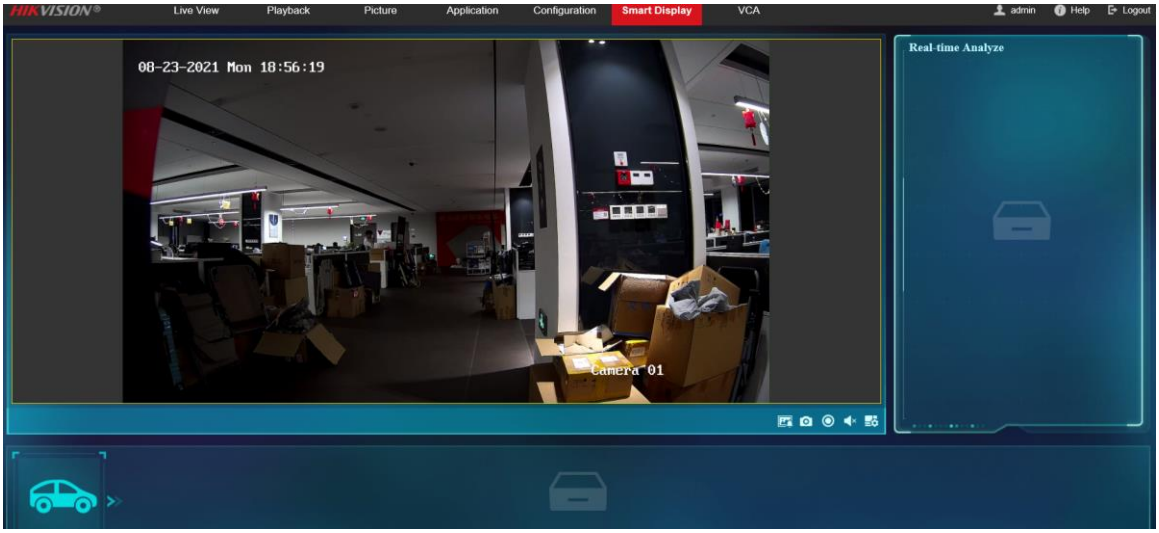

Appendix C

Barrier Location and Signage

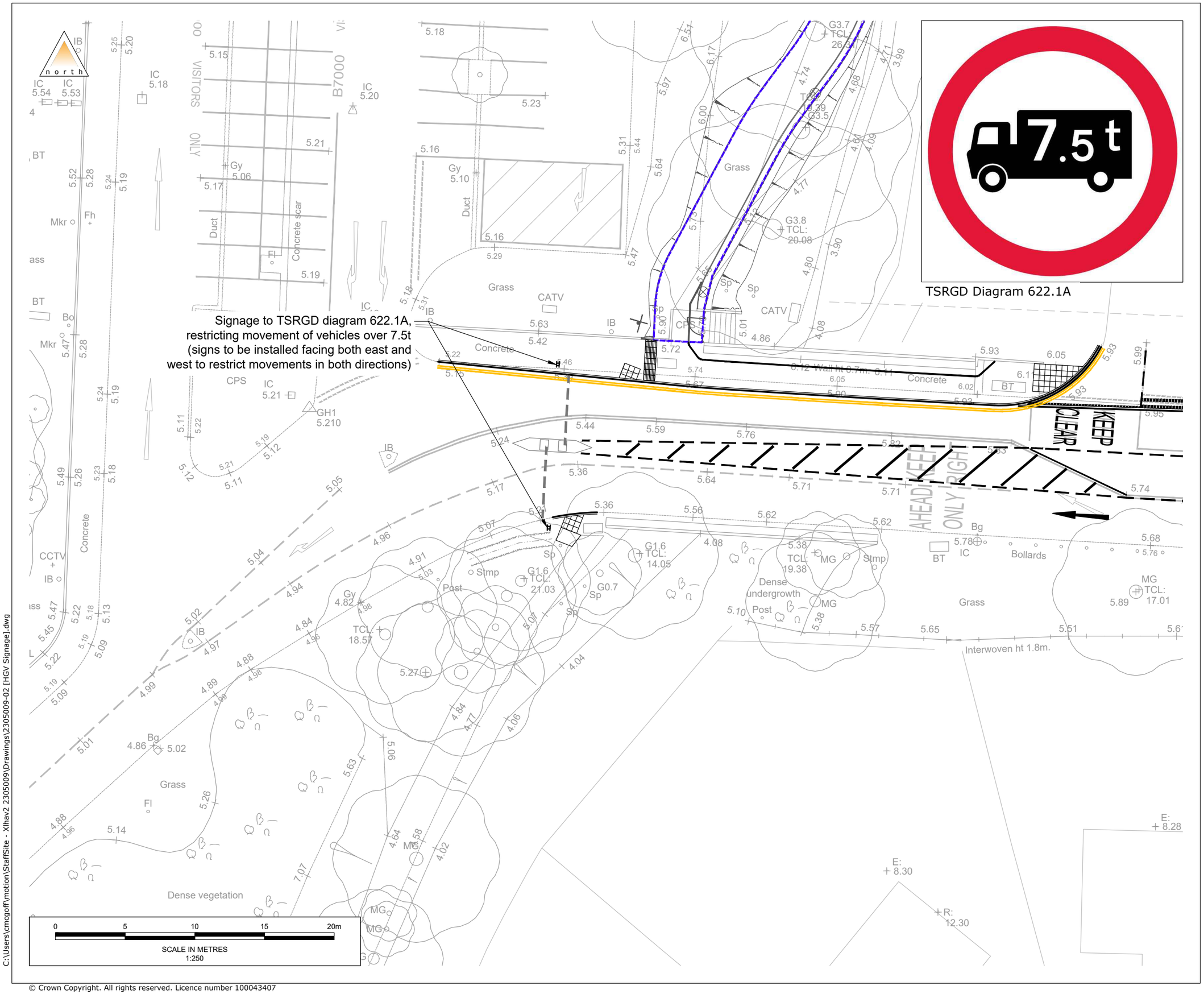

C:\Users\cmcgoff\motion\StaffSite - Xlhav2 2305009\Drawings\2305009-02 [HGV Signage].dwg

© Crown Copyright. All rights reserved. Licence number 100043407

Notes

1. All levels and dimensions to be checked on site before any work commences. All dimensions in metres unless stated otherwise.
2. This drawing is based on survey information supplied by PRC, and Motion cannot guarantee the accuracy of the data provided.

Rev.	Description	Drn	Chk	App	Date
-	First Issue	cm	jr	jr	13/06/2025

Drawing Status:

motion

Guildford - Reading - London
www.motion.co.uk

Client:
XLB Property

Project:
Langstone Technology Park

Title:
HGV Signage Strategy

Scale: 1:250 (@ A3)

Drawing: 2305009-02

Revision: -