LIDL HAVANT

Tree Survey Report and Arboricultural Impact Assessment

JSL5098_770
Tree Survey Report and Arboricultural Impact Assessment
C
11 July 2024

rpsgroup.com

Quality Management

Version	Status	Authored by	Reviewed by	Approved by	Review date
-	For Planning	R. Carthew	D. Cox	D. Cox	March 2024
A	For Planning	R. Carthew	D. Cox	D. Cox	March 2024
B	For Planning	Mark Wilson	D. Cox	D. Cox	June 2024
C	For Planning	D. Cox	D. Cox	D. Cox	July 2024

Approval for issue

David Cox	[redacted]	11 July 2024

File/Model Location

Document location:	P:\3700 Series\JSL3712 - Lidl Havant\Report
Model / Appendices location:	P:\3700 Series\JSL3712 - Lidl Havant\Report

© Copyright RPS Group Plc. All rights reserved.

The report has been prepared for the exclusive use of our client and unless otherwise agreed in writing by RPS Group Plc, any of its subsidiaries, or a related entity (collectively 'RPS'), no other party may use, make use of, or rely on the contents of this report. The report has been compiled using the resources agreed with the client and in accordance with the scope of work agreed with the client. No liability is accepted by RPS for any use of this report, other than the purpose for which it was prepared. The report does not account for any changes relating to the subject matter of the report, or any legislative or regulatory changes that have occurred since the report was produced and that may affect the report. RPS does not accept any responsibility or liability for loss whatsoever to any third party caused by, related to or arising out of any use or reliance on the report.

RPS accepts no responsibility for any documents or information supplied to RPS by others and no legal liability arising from the use by others of opinions or data contained in this report. It is expressly stated that no independent verification of any documents or information supplied by others has been made. RPS has used reasonable skill, care and diligence in compiling this report and no warranty is provided as to the report's accuracy. No part of this report may be copied or reproduced, by any means, without the prior written consent of RPS.

Prepared by:

RPS

Ross Carthew (FdSc Arb)
Arboricultural Consultant

Lakesbury House, Hiltingbury Road,
Hampshire, SO53 5SS

T: +44 2380 810 440
E: rpsso@rpsgroup.com

Prepared for:

Lidl Great Britain

Mr Douglas Symington

Lidl, Foxes Park, Brownhill Way, Nursling,
Southampton, SO16 0AE

T 02380 742584
E douglas.symington@lidl.co.uk

Contents

1 INTRODUCTION....1
2 SITE LOCATION....2
3 SURVEY METHODOLOGY....3
4 APPRAISAL AND RECOMMENDATIONS....4
5 ARBORICULTURAL IMPACT ASSESSMENT....7
6 TREE WORKS....11
7 TREE PROTECTION MEASURES....12
8 SUMMARY....14

Tables

Table 1 Tree Characteristics recorded during survey
Table 2 Tree Survey Schedule

Appendices

Table 2 Tree Survey Schedule
Appendix A Tree Constraints Plan
Appendix B Tree Removal & Protection Plan
Appendix C Example Tree Protection Barriers (BS5837:2012 Fig 2 & 3)
Appendix D Construction Exclusion Zone (CEZ) Sign
Appendix E Arboricultural Glossary

1 INTRODUCTION

1.1 This Tree Survey and Arboricultural Impact Assessment (AIA) has been prepared by RPS on behalf of Lidl Great Britain to support the planning application for proposed development on land at Purbrook Way, Havant, PO9 3QJ.

1.2 An AIA has previously been produced for this project following a tree survey of the application area that was carried out by RPS in December 2022. Please see RPS report JSL3712_770F for full details of previous survey and report.

1.3 This report has been produced following a resurvey of the application area that was carried out by RPS on the 16th of February 2024 in accordance with the requirements of BS5837:2012. Refer to Tree Constraints Plan (Appendix A).

1.4 This report has been prepared in broad accordance with the requirements set out in BS5837:2012 'Trees in relation to design, demolition and construction – Recommendations.'[1]

1.5 The purpose of this report is to:

- Provide an assessment of the quality of the surveyed trees with reference to the categories and sub-categories listed within Table 1 - BS5837:2012.
- Assess and quantify the arboricultural impact of the proposed development within the survey area, based on the proposed development layout.
- Provide additional arboricultural information and advice in relation to the protection of trees throughout the development of the site.
- Provide a Tree Protection and Removal Plan to detail the proposed protective measures to be taken in respect of the trees during development of the site.

1.6 The Tree Protection and Removal Plan included in Appendix B identifies the following:

- Trees to be retained
- Trees to be removed
- Alignment and design of protective fencing
- Root Protection Area (RPA) of trees

1.7 The Tree Protection and Removal Plan shall be made available to all relevant site operatives prior to and throughout the construction process, so they understand the scope and importance of the tree protection measures.

1.8 To minimise the potential for harm to occur to retained trees all works shall be carried out in accordance with the Tree Protection Measures and construction techniques detailed within this report.

1.9 In particular, the establishment of a Construction Exclusion Zone (CEZ) by erection of Tree Protection Fencing, will minimise the potential for harm to occur to retained trees.

[1] British Standards Institute. British Standard (BS5837) Trees in Relation to Design, Demolition and Construction - Recommendations. 2012.

2 SITE LOCATION

2.1 The survey covered an area of land located adjacent B&Q, Havant, Purbrook Way, Hampshire, PO9 3QJ.

2.2 The land is roughly centred on OS grid reference SU69440784. The Local Planning Authority (LPA) governing this site is Havant Borough Council.

2.3 The soilscape of the area typically consists of 'Slowly permeable, seasonally wet, slightly acid but base-rich loamy and clayey soils.'[2]

Tree Preservation Orders\ Conservation Areas

2.4 A desktop investigation using the Havant Borough Council [3] interactive online map confirmed that there is one Tree Preservation Order covering the site, as shown below, this is shown in Appendix A & B with a blue hatch:

2.5 A desktop investigation using the Magic Map Application[2] confirmed that there is no Ancient Woodland on site, as shown below:

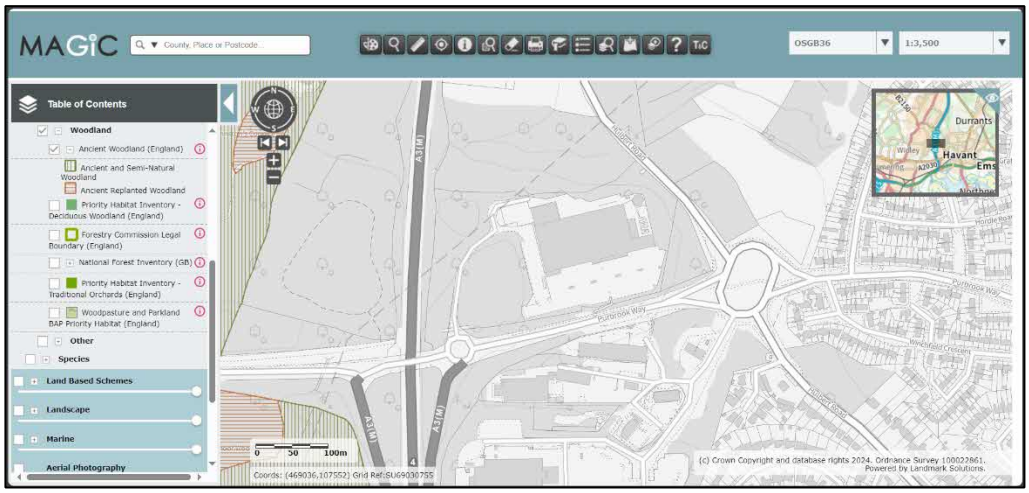

[2] *https://magic.defra.gov.uk/MagicMap.aspx*

[3] https://maps.havant.gov.uk/havant.aspx

3 SURVEY METHODOLOGY

3.1 This report was completed by Ross Carthew FdSc Arb, of RPS group and authorised by David Cox, a professional member of the Arboricultural Association and Chartered Landscape Architect of RPS Group.

3.2 The report and survey were carried out in general accordance with the requirements set out in BS 5837:2012 “Trees in Relation to Design, Demolition and Construction – Recommendations”.

3.3 The tree survey involved a visual inspection from the ground of individual specimens and groups of trees in order to record their amenity value, management recommendations and dimensions. Where observed, the general condition of all the trees has been noted. The survey does not constitute a full arboricultural condition assessment involving the detailed inspection of trees in relation to their structural condition, decay, and any other physical and pathogenic defects.

3.4 The locations of the trees are based upon a topographic survey (18766/T/01-02: RevD) produced by EDI in December 2023.

3.5 The survey assesses individual trees and groups of trees for quality and benefits within the context of proposed development. The quality of each tree or group of trees has been recorded by allocating it to one of four categories as described in Table 1. These categories have been differentiated in Appendix A & B by colour.

3.6 The survey information was recorded on the attached schedule (Table 2) in general accordance with the guidance contained within Section 4 of BS 5837:2012 “Trees in Relation to Design, Demolition and Construction - Recommendations".

3.7 See Table 1 for a breakdown of the information recorded during the survey.

Limitations

3.8 The findings of this survey are not valid following adverse or unpredictable weather conditions or for any failure due to ‘force majeure’ or unpredictable events.

3.9 Trees were not climbed or inspected below ground level and inaccessible trees will have best estimates made about the location, physical dimensions and characteristics. Where direct access to trees was difficult a ‘#’ denotes this within the Tree Survey Schedule (Table 2).

3.10 Trees and woody vegetation were not assessed for their potential impact upon future construction issues such as foundation designs (re: NHBC chapter 4.2)’[4]. Whilst this report may assist in assessing likely future impacts, it should not be classed as a comprehensive vegetation survey in relation to impact upon future designs.

3.11 It is recommended that further arboricultural assessments be undertaken in order to assess the full health and safety of all trees which may possess structural or pathogenic conditions.

[4] NHBC. ‘Chapter 4.2- Building Near Trees’. NHBC Standards 2016. 2016.

4 SURVEY FINDINGS AND RECOMMENDATIONS

Survey Findings

4.1 During the survey 50 trees were surveyed as individuals. The survey also recorded 5 Groups of trees.

4.2 The majority of these trees were located on the eastern side of the site and around the peripheries.

4.3 The species diversity and BS5837 quality of the individually surveyed trees is broken down in the table below:

Species	A	B	C	U	Total
Salix caprea (Goat Willow)			11		11
Fraxinus excelsior (Ash)			10	1	11
Acer pseudoplatanus (Sycamore)			5		5
Populus alba (White Poplar)		1	4		5
Quercus robur (Common Oak)		4			4
Crataegus monogyna (Hawthorn)			3		3
Prunus avium (Wild Cherry)		1	1		2
Betula pendula (Silver Birch)		2			2
Pinus sylvestris (Scots Pine)		1			1
Salix alba (White Willow)			1		1
Carpinus betulus (Hornbeam)			1		1
Acer saccharinum (Silver Maple)			1		1
Unknown (Unknown)				1	1
Malus (Apple)			1		1
Pinus nigra 'maritima' (Corsican Pine)		1			1
Total		**10**	**38**	**2**	**50**
Distribution Percentage	**0.0%**	**20.0%**	**76.0%**	**4.0%**	**100.0%**

4.4 The BS5837 quality of the Groups recorded during the survey is broken down in the table below:

Type	A	B	C	U	Total
Groups	0	2	3	0	5
Grand Total	**0**	**2**	**3**	**0**	**5**
Distribution Percentage	**0.00%**	**40.00%**	**60.00%**	**0.00%**	**100%**

General Recommendations

Planning considerations

4.5 Trees can offer many benefits, including the provision of visual amenity, softening or complementing the effect of the built environment, adding maturity to new developments and by making places more comfortable in tangible ways e.g. contributing screening and shade, reducing wind speed and turbulence, intercepting snow and rainfall, and reducing glare.

4.6 New tree planting opportunities should be considered as part of any potential redevelopment; this will help to broaden the age diversity of the tree cover within the area. Sufficient space should be provided for species with significant stature to grow out into maturity.

4.7 Under the UK planning system, local authorities have a statutory duty to consider the protection and planting of trees when granting planning permission for proposed development. The potential effect of development on trees, whether statutorily protected (e.g. by a tree preservation order or by their inclusion within a conservation area) or not, is a material consideration that is considered when dealing with planning applications.

4.8 Trees covered by a Tree Preservation Order are protected under the Town and Country Planning Act 1990 (Trees Regulation 2012). The local authority must be consulted, and permission sought for any works that may affect them.

Design and Site Layout Considerations

4.9 A Tree Constraints Plan defines the Root Protection Area (RPA) for each tree shown as a circle. This area may be adjusted should physical constraints or topographical features limit root activity in a particular area, however the total area should remain the same. The changes should only be done by an arboriculturist. Furthermore, during any future site planning exercises, the current and future growth potential of the trees should be considered.

4.10 The RPA for single stem trees broadly equates to a radius 12 times the stem diameter of the tree at 1.5m above ground level or the extent of canopy spread, whichever is the greater. For multi-stemmed, low branching trees or those with trunks with an irregular girth the point of stem diameter measurement is adjusted in consideration of these factors and in accordance with the illustrations in BS5837:2012 (Annex C).

4.11 The RPA should become an exclusion zone during construction works and for any development. It should be fenced-off and protected in accordance with BS5837:2012. The canopy is likewise susceptible to damage during construction work and requires similar protection.

4.12 No activities that result in excavations, changes in level or soil compaction should take place within the RPA of any retained trees, especially older mature trees. This would include the storage of materials, any construction work, trafficking by vehicles or even excessive trafficking by pedestrians.

4.13 If some form of construction must take place within the RPA, then certain measures need to be adopted to avoid disturbance or damage to the roots and to maintain moisture infiltration and gaseous diffusion into the soil.

Services

4.14 Services likewise should be routed outside the existing or potential root zone of trees. Where it is unavoidable, then certain measures should be employed to avoid damage to the tree's larger roots.

4.15 The location and siting of new facilities near trees should consider the potential impact on and conflict with both tree roots and canopy. This should consider the ultimate size of existing young and middle-aged trees at maturity. Conversely the impact of the tree on the activities should also be considered regarding obstruction, shading, leaf fall and root action. These are problems that can be managed provided sufficient space is allowed for.

4.16 Any new services should avoid the RPAs of any retained tree. Where it is unavoidable, then the route of the services must be designed by an Engineer in consultation with an Arboriculturist. Further advice can be found in NJUG Volume 4- "Guidance for the planning, installation and maintenance of utility services in proximity of trees, 2007".

Trees and Management of Health and Safety

4.17 It is recommended that a programme of periodic arboricultural assessments be undertaken in order to regularly assess the full health and safety of all trees both in full leaf and bare stemmed. The assessments should prioritize areas based on levels of access and presence of target (i.e. exposure of people to hazard) and accord with arboricultural advice, taking account of relevant factors (where known) that affect safety such as the age class, condition, size and species of the trees.

5 ARBORICULTURAL IMPACT ASSESSMENT

Introduction

5.1 Trees have finite energy reserves, developed each year throughout the growing season, which are utilised for biological processes such as growth and defence against pests or diseases throughout the following year.

5.2 Any development in proximity to trees has the potential to cause harm to those trees unless control measures are identified and acted upon; as such it is essential to consider the relationship between the proposed development and the retained trees to identify what precautions are necessary, proportionate and appropriate.

5.3 Development has the potential to impact upon the above ground and below ground parts of trees. Whilst some damage that can occur, such as physical damage to the trees stems and branches from machinery movements, is clearly visible, the impact from other aspects of work common on development sites, which can have a significant effect upon the continued health of trees, are not always immediately evident.

5.4 Damage that is not immediately evident, but which can cause long term harm to retained trees, includes things such as damage to the soil structure by compaction causing root damage and levels changes altering the water table and affecting moisture availability.

5.5 To minimise the potential for harm to occur to retained trees all works must be carried out with regard to the Tree Protection measures detailed within this report.

5.6 In general, it can be seen that, by adopting appropriate methods of working, precautionary and protective measures, significant harm to retained trees can be avoided.

5.7 In particular the establishment of a Construction Exclusion Zone (CEZ) by erection of Tree Protection Fencing will minimise the potential for harm to occur to retained trees.

5.8 The retention and protection of significant trees and vegetation will assist in assimilating the proposed development into the wider landscape and offer long term tree cover.

5.9 Furthermore, redevelopment of the site may offer an excellent opportunity to actively manage any retained vegetation and accordingly we recommend restorative tree works be undertaken as appropriate. This will further improve the amenity value and landscape setting of the site and increase the useful life of any retained trees.

Brief Description of Proposed Development

5.10 This report relates to the following:

- Lidl store; and,
- Associated infrastructural works.

Proposed Tree Removal

5.11 To facilitate the proposed scheme and its various elements, selected tree removal is required. The reasons for tree removal consist of: -

- To facilitate the Lidl retail store and car park itself.
- To facilitate the installation of the new water diversions to the south of the main site, and safe construction access.
- To facilitate the new access footpath as it curves into site (i.e. the start of the car park).
- The removal of dead/dying trees (also called category U trees)
- The coppicing of poorly formed Goat Willow trees, which have potential structural fragility.
- The removal of diseased Ash trees, which will not provide any long term tree cover.

5.12 30 trees will require removal in order to facilitate the proposed layout and its associated elements.

5.13 These trees are categorised as follows:

Category	Total Number	% of Total Removals	Tree Referance Numbers
A	0	0.0%	
B	5	17%	T45, T46, T47, T48, T50
C	23	77%	T17, T18, T19, T22, T24, T26, T29, T30, T32, T34, T35, T37, T38, T39, T44, T49. Three trees from G2 and Three trees from G3.
U	2	6%	T14, T36
Total	**30**	**100.0%**	

5.14 Additionally, removal of group G5 – category B and partial removal of group G4 - category C is required in order to facilitate the proposed development, see Appendix B for extent of removal required.

Assessment of Tree Removal Impact

5.15 The table below shows the impact the individual tree removals will have on the site:

Category	Total Surveyed	Proposed Removals	% of Surveyed Trees Removed	Total Retained	% of Trees Retained
A	0	0	N/A	0	N/A
B	11	5	46%	6	54%
C	38	23	61%	15	39%
U	2	2	100%	0	0%
Total	**51**	**30**	**58%**	**21**	**42%**

5.16 As the table above shows, most of the individual trees on site are to be retained, with 42% of the individual trees surveyed on site being retained.

5.17 It should also be noted that the majority of the trees to be removed are of lower quality with 61% of the removals being category C or lower.

Tree Pruning Works

5.18 It may also be necessary to lift the crowns of any trees that overhang the Tree Protection Fencing into the development site in order to lift them clear of works. This should be assessed on site as and when necessary and any pruning carried out to the specification laid out in Section 6 of this report.

5.19 This pruning work, if carried out in accordance with Section 6 of this report, should be minimally invasive and have little impact on the overall health of the tree.

Proposed Works Within Root Protection Areas

5.20 Root Protection Areas for each surveyed tree were determined in accordance with BS5837:2012 and plotted on the Tree Constrains Plan and Tree Removal & Protection Plan (Appendix A & B) as a circle, with the tree located centrally, extending to encompass the area of ground, and thus the rootable soil volume, required for protection.

5.21 After reviewing the RPAs on site, it has been noted that the proposed development will all take place outside of the retained trees RPAs.

Outline methodology within Root Protection Areas

5.1 All new (and existing re-routed) services shall be routed outside the existing or potential RPA of retained trees. Where it is unavoidable, then hand excavation shall be employed to avoid damage to the larger roots and the services slid through or below the root system. Ducting shall be used to carry cables. Reference shall be made to the recommendations included within Guidelines for the Planning, Installation and Maintenance of Utility Apparatus in Proximity to Trees (NJUG 4)[5].

5.2 Details of Tree Protection Fencing and ground protection are given in Section 7 of this document.

5.3 The RPA should become an exclusion zone during construction works and for any development. It should be fenced-off and protected in accordance with BS5837:2012. The canopy is likewise susceptible to damage during construction work and requires similar protection.

5.4 No activities that result in excavations, changes in level or soil compaction should take place within the RPA of any retained trees, especially older mature trees. This would include the storage of materials, any construction work, trafficking by vehicles or even excessive trafficking by pedestrians.

5.5 The location and siting of new facilities near trees should consider the potential impact on and conflict with both tree roots and canopy. This should take into account the ultimate size of existing young and middle-aged trees at maturity. Conversely the impact of the tree/s on end user activities should also be considered with regard to obstruction, shading, leaf fall and root action. These are problems that can be managed provided sufficient space is allowed for.

5.6 Where works within the RPA are unavoidable works must be undertaken by hand and the soil levels should be carefully reduced by hand to avoid damage to the bark of larger roots directly beneath and adjacent to the excavation. Where these become exposed, they should be further

[5] *http://streetworks.org.uk/wp-content/uploads/V4-Trees-Issue-2-16-11-2007.pdf*

protected from drying out. Where root pruning is unavoidable it should be made at a suitable place within the root system, avoiding damage to surrounding tissue in accordance with BS 3998:2010[6]. Final pruning cuts shall be made at right angles to the axis of the root and the final cut wound should be smooth and as small as possible, free from ragged torn ends.

5.7 To minimise harm occurring as a result of the works existing hardstanding should be reused. Any necessary hard surface removal within the Root Protection Area (RPA) shall be carried out by low impact handheld pneumatic tools. Removal of the surface shall occur in strips working from the undisturbed surface, working in a retreating manner away from the retained trees. Subsequent removal of arisings / debris shall also be carried out by hand.

[6] British Standards Institute. British Standard (BS3998) Trees Work - Recommendations. 2010.

6 TREE WORKS

Standard of Work

6.1 The tree work required in order to facilitate this development will adhere to the following standards.

6.2 All tree works shall be carried out in accordance with BS3998:2010 and latest arboricultural best practice.

6.3 All tree work shall be carried out by suitably qualified, competent and insured arboricultural contractors in accordance with Arboricultural Association Standard Conditions of Contract and Specifications for Tree Works (2008) Edition and BS 3998:2010 Tree Work.

6.4 All green and woody waste generated by the tree works shall be removed from site and disposed of in an environmentally sustainable manner.

6.5 When a branch is removed at its point of attachment, injury of the wood and bark of the parent stem or branch above the cut shall be avoided. If a branch collar is visible, the final cut shall be just outside it and care shall be taken to avoid tearing retained wood and bark when the cut is made. Preliminary cuts shall be made, if necessary, so as to remove weight, before a final cut is made. Care shall be taken to prevent falling branches from harming other parts of the tree (including its roots), its surroundings, people or property. Heavy branches shall be removed in sections and, where necessary, shall be lowered with ropes.

6.6 Prior to the commencement of any tree works an appropriate risk assessment shall be produced to describe the measures required to fulfil the statutory safety obligations. It shall aim to identify and prioritise the necessary control measures and precautions.

6.7 Following the works, it is recommended that the trees are monitored on a regular basis to ensure their ongoing vitality and health. These inspections shall be completed by a suitably qualified and experienced person.

Timing of Works

6.8 Any tree works required shall be completed prior to any construction and enabling works on the site.

6.9 All works shall be timed to have regard to the phenological cycles of protected species that are associated with trees; notably birds and bats.

6.10 Nesting birds are protected by law and any removal / tree works should not be carried out during the bird nesting season (March-August inclusive). Should any vegetation be outlined for removal during this period, then an ecological inspection would be required to check that no nesting birds are present. Should checks reveal nesting birds the vegetation must remain until September or until an ecologist has certified that the fledglings have left the nest. A visual inspection for bats shall also be carried on mature / ivy clad trees prior to commencing operations.

7 TREE PROTECTION MEASURES

Construction Exclusion Zone

7.1 The protective fence line defines the Construction Exclusion Zone (CEZ), and the fencing shall not be moved or taken down at any time. Within the Construction Exclusion Zone there must be no mechanical digging or scraping; no alteration to existing ground levels including soil stripping; no earthworks; and no handling or discharge of any chemical substance, concrete washings or of any fuels.

7.2 Furthermore, vehicular or pedestrian access and the storage of any materials is prohibited within the Construction Exclusion Zone.

7.3 Additionally, no materials that may contaminate the soil such as concrete mixings, diesel oil and vehicle washings shall be discharged within 10m of the stem of any tree and no fires shall be lit within 10m of the maximum extent of a trees crown.

Tree Protection Fencing

7.4 Unless otherwise agreed in writing with the Arboricultural Consultant and/or LPA Tree Officer, the fencing system to be utilised shall be in accordance with Appendix C and compliant with BS5837:2012.

7.5 The tree protection fence shall be erected as shown on the Tree Protection and Removal Plan (Appendix B) included with is report.

7.6 The fence line shown is the minimum required and the length of the fence shall be extended or adjusted on site as agreed with the Arboricultural Consultant to ensure satisfactory protection of all retained trees and RPAs.

7.7 Where proposed (permanent) construction site-hoarding provides the same level of protection to the retained trees and RPAs as the proposed tree protection fence, subject to agreement with the Arboricultural Consultant, the hoarding may serve as the tree protection fence. Notwithstanding, depending on the form and alignment of the construction site- hoarding it may be necessary to provide additional tree protection fence to ensure adequate protection of retained trees and RPAs as shown on the Tree Protection and Removal Plan.

7.8 Once the protective barrier is in place it must remain in situ throughout the course of the development until the completion of development, other than to facilitate agreed tree removal; see below.

7.9 Where necessary, tree protection fencing may be temporarily re-aligned in order to facilitate tree removal. Fencing is to be re-instated immediately following removal in a manner that encompasses the remaining trees and their respective RPAs.

7.10 During tree removal, no wheeled or tracked machinery is to enter the area previously encompassed by tree protective fencing as shown in the Tree Protection and Removal Plan.

7.11 Copies of the Tree Protection and Removal Plan shall be placed in the site office for reference by all site staff.

7.12 Signs detailing the purpose of the protective barrier shall be attached to the barriers at 10m intervals. Such signs should be weatherproof and shall be substantially in the form of the specimen provided in Appendix D. Signs must be replaced as necessary should they be removed or become illegible.

7.13 Following erection of the protective barriers and prior to commencement of the development it is recommended that an inspection of the site, by either the Council's Tree Officer or the Arboricultural Consultant, is arranged to confirm fencing has been installed in accordance with the Tree Protection and Removal Plan and that any relevant arboreal conditions attached to the planning consent have been met.

Site Compounds and Materials Stores

7.14 Activities related to the establishment of a temporary site compound have the potential to impact upon retained trees by various means. In particular the storage and mixing of chemicals and materials such as concrete can have a damaging effect on tree health if precautions are not taken.

7.15 To prevent harm occurring to trees, provision for materials storage, deliveries and other related activities shall be made available in areas away from retained trees.

7.16 Under no circumstances shall materials or plant be stored beneath the canopy or within or abutting the Root Protection Zone of any retained trees/hedges, whether fenced or not.

Monitoring

7.17 Following erection of the protective fencing and prior to commencement of the construction phase, an inspection of the site by either the Council's Tree Officer or the Arboricultural Consultant should be arranged to confirm fencing has been installed in accordance with the Tree Protection and Removal Plan (Appendix B).

7.18 It is also recommended that further monitoring visits be carried out following commencement of the works on site, ideally on at least a monthly basis to ensure ongoing functionality of the CEZ and to check on tree condition.

Reporting

7.19 Should any arboricultural issues become apparent during the works the site manager should immediately contact the Arboricultural Consultant or the Council's Tree Officer for advice upon how to proceed.

8 SUMMARY

Introduction

8.1 This Tree Survey and Arboricultural Impact Assessment (AIA) has been prepared by RPS on behalf of Lidl Great Britain to support the planning application for proposed development on land at Purbrook Way, Havant, PO9 3QJ.

8.2 An AIA has previously been produced for this project following a tree survey of the application area that was carried out by RPS in December 2022. Please see RPS report JSL3712_770F for full details of previous survey and report.

8.3 This report has been produced following a resurvey of the application area that was carried out by RPS on the 16th of February 2024 in accordance with the requirements of BS5837:2012. Refer to Tree Constraints Plan (Appendix A).

Site

8.4 The survey covered an area of land located adjacent B&Q, Havant, Purbrook Way, Hampshire, PO9 3QJ.

8.5 A desktop investigation using the Bracknell Forest Councils[7] interactive online map confirmed that there is one Tree Preservation Order covering the site, this is shown in Appendix A & B with a blue hatch.

Survey

8.6 During the survey 51 trees were surveyed as individuals. The survey also recorded 5 Groups of trees.

Impacts

8.7 30 trees will require removal in order to facilitate the proposed layout and its associated elements. 5No. are category B, 23No. are category C and 2No. are unsuitable for retention.

8.8 Additionally, removal of group G5 – category B and partial removal of group G4 - category C is required in order to facilitate the proposed development, see Appendix B for extent of removal required.

8.9 It may also be necessary to lift the crowns of any trees that overhang the Tree Protection Fencing into the development site in order to lift them clear of works. This should be assessed on site as and when necessary and any pruning carried out to the specification laid out in Section 6 of this report.

8.10 Overall, the impact of this proposed tree removal work, can be seen as acceptable and deemed appropriate in order to facilitate construction.

[7] https://maps.havant.gov.uk/havant.aspx

TABLES & APPENDICES

Table 1

Tree Characteristics Recorded During Survey

Tree Ref No:	Sequential reference number of trees or groups of trees. Avenues, woodlands and hedgerows were also recorded on the tree constraints plan. # - denotes inaccessible trees (best estimates are made about the location, physical dimensions and characteristics.)				
Species	Species listed by common name, with scientific names (italic lettering).				
Height (m)	Estimated height of canopy to nearest metre.				
Branch Spread	branch spread, taken as a minimum at the four cardinal points, to derive an accurate representation of the crown				
Stem diameter @ 1.5 m (m)	Estimated diameter of trunk at 1.5 m above ground level in metres unless otherwise indicated, multi-stemmed trees being measured in accordance with Annex C: BS5837				
Existing height above ground level	To inform on ground clearance, crown/stem ratio and shading the estimated height of the first significant branch and direction of growth and canopy above ground level.				
Stem No.	Number of stems (if necessary) of individual tree.				
Life Stage	Expressed as:-	Y SM EM M	(Young) (Semi-mature) (Early-mature) (Mature)	OM V D	(Over-mature) (Veteran) (Dead)
Physical Condition	Apparent condition expressed as the following categories, based upon a brief visual inspection from the ground only:-				Good Fair Poor Dead
Comments / Management Recommendations	General observations, particularly of structural and/or physiological condition (e.g. the presence of any decay and physical defect), and/or preliminary management recommendations and potential for wildlife habitats (not exhaustive).				
Estimated remaining contribution (years)	Estimated remaining contribution, in years (<10, 10+,20+,40+)				
Tree Quality Assessment Value: <u>Category</u>	Criteria grading with regards to Table 1: BS 5837:2012, expressed as:-	**A** (Trees/Vegetation of high quality and value) **B** (Vegetation of moderate quality and value) **C** (Trees/Vegetation of low quality and value) **U*** (Those in such a condition that they cannot realistically be retained as living trees in the context of the current land use for longer than 10 years)			
	* Category U trees can have existing or potential conservation value which might be desirable to preserve.				
Tree Quality Assessment Value: <u>Sub - Category</u>	Criteria grading with regards to Table 1: BS 5837:2012, expressed as:-	**1** (Trees with mainly *arboricultural* value) **2** (Trees with mainly *landscape* value) **3** (Trees with mainly *cultural / conservation* value)			

Table 2

Tree Survey Schedule

TREE SURVEY SCHEDULE

Site: Lidl: Havant
Project Schedule Ref: JSL5098_750
Drawing Reference: JSL5098_700
Survey date: 16/02/2024

Surveyor: R.Carthew
Status: For Planning
Revision: -
Notes: -

Ref. no	Species	Height (m)	Canopy Spread (m) N	E	S	W	Crown Area	Stem dia. (mm)	Stem no. at 1.5m	Height of crown clearance (m)	FSB Height (Direction)	Age class	Condition	General Observations Management Recommendations	Estimated remaining contribution (yrs)	Tree Quality Category (BS5837)
T1	Populus alba (White Poplar)	10	3.5	3.5	4	1.5	30	150	1	2	1.5 (N)	SM	Good	Growing within roadside scrub, crown bias to east due to pressure from adjacent tree.	10+	C2
T2	Populus alba (White Poplar)	10	1.5	2	4	2.5	18	150	1	2	1.5 (N)	SM	Good	Growing within roadside scrub, crown bias to south due to pressure from adjacent tree.	10+	C2
T3	Prunus avium (Wild Cherry)	10	5.5	4	4	2	45	250	1	2	3 (N)	EM	Fair	Ivy on main stem, stem bifurcates at 2m, physically suppressed by adjacent willow bough which has partly failed onto tree.	10+	C2
T4	Salix alba (White Willow)	10	8	7	8	7	177	400 400 350 250	4	2	1 (NE)	M	Fair/Poor	Multi-stemmed tree growing within scrub; included unions, ivy on base of stem and into lower crown, 4th stem has collapsed to the south, remaining tree has bias to north.	10+	C2
T5	Fraxinus excelsior (Ash)	10	3	3	3	3	28	200	1	2	3 (N)	SM	Fair	Ivy on main stem into lower crown, otherwise unremarkable.	10+	C2
T6	Populus alba (White Poplar)	10	1	2	4	1	12	150	1	2	1.5 (N)	SM	Fair	Growing within roadside scrub, crown bias to south due to pressure from adjacent trees.	10+	C2
T7	Salix caprea (Goat Willow)	10	2.5	2	3	1	14	150	1	1	0.5 (N)	SM	Fair	Growing within dense scrub, suppressed by adjacent tree.	10+	C2
T8	Salix caprea (Goat Willow)	10	5	3	4	4	50	200 250 200	3	2	0.5 (N)	EM	Fair	Growing within dense scrub, minor deadwood throughout crown.	10+	C2
T9	Carpinus betulus (Hornbeam)	10	5	2	3	3	33	200	1	2	1.5 (N)	SM	Fair	Main stem splits into 5 co-dominant leaders at 1.5m.	10+	C2
T10	Salix caprea (Goat Willow)	12.5	3	3	3	3	28	100 150	2	2	-	EM	Fair	Twin stems from ground level; entwined and rubbing.	10+	C2
T11	Populus alba (White Poplar)	12.5	4	4	1.5	2	22	220	1	2	1.5 (N)	EM	Fair	Secondary leader from 1m, ivy on stem, crown bias to Northeast due to pressure from adjacent trees.	10+	C2

Note: This survey is based on a brief visual inspection from the ground.
It is not intended as a full arboricultural inspection.
- indicates estimated/offsite tree. * - indicates off site tree. FSB - First Signifigant Branch.

TREE SURVEY SCHEDULE

Site: Lidl: Havant
Project Schedule Ref: JSL5098_750
Drawing Reference: JSL5098_700
Survey date: 16/02/2024

Surveyor: R.Carthew
Status: For Planning
Revision: -
Notes: -

Ref. no	Species	Height (m)	Canopy Spread (m) N	E	S	W	Crown Area	Stem dia. (mm)	Stem no. at 1.5m	Height of crown clearance (m)	FSB Height (Direction)	Age class	Condition	General Observations Management Recommendations	Estimated remaining contribution (yrs)	Tree Quality Category (BS5837)
T12	Populus alba (White Poplar)	15	5	3	3	5	50	250	1	4	4 (SW)	EM	Fair	Larger trees within group of leggy poplar, slight stem bias to East.	20+	B2
T13	Acer pseudoplatanus (Sycamore)	10	2	2	2	2	13	150	1	3	-	SM	Fair	Wound at base of stem and on exposed surface roots.	10+	C2
T14	Unknown (Unknown)	7.5	2	2	2	2	13	150	1	5	-	SM	Dead	Wound at base of stem and on exposed surface roots.	<10	U
T15	Malus (Apple)	7.5	4	4	3	4	44	200 100 100	3	2	3 (N)	EM	Fair/Poor	Multiple stems f3om 0.5m, growing through fence, moderate deadwood throughout crown.	10+	C2
T16	Acer saccharinum (Silver Maple)	7	1	3	3	2.5	17	100	1	3	-	Y	Fair	Wound on lower stem, co-dominant leaders from 2m.	10+	C2
T17	Acer pseudoplatanus (Sycamore)	10	2	2	2	2	13	150	1	5	-	SM	Poor	Small tree with dead main leader.	10+	C2
T18	Fraxinus excelsior (Ash)	12.5	2	2	2	2	13	200	1	6	-	SM	Fair/Poor	Wounds around base of stem, minor deadwood throughout crown.	10+	C2
T19	Fraxinus excelsior (Ash)	12.5	2	2	2	2	13	200	1	6	-	SM	Fair/Poor	Wounds around base of stem, minor deadwood throughout crown.	10+	C2
T20	Acer pseudoplatanus (Sycamore)	12.5	2	2	2	2	13	200	1	6	-	SM	Fair/Poor	Wounds around base of stem, minor deadwood throughout crown.	10+	C2
T21	Prunus avium (Wild Cherry)	15	5.5	5	3	4	58	300	1	2	2.5 (N)	M	Good	Growing on embankment, ivy on main stem.	20+	B2
T22	Crataegus monogyna (Hawthorn)	7.5	3	1	1	3	13	100	1	2	-	SM	Fair	Multiple wounds on main stem, twin leaders from 2m.	10+	C2
T23	Betula pendula (Silver Birch)	15	2	1	3	4	16	250	1	3	4 (W)	M	Fair	Unremarkable tree.	20+	B2

Note: This survey is based on a brief visual inspection from the ground.
It is not intended as a full arboricultural inspection.
- indicates estimated/offsite tree. * - indicates off site tree. FSB - First Signifigant Branch.

TREE SURVEY SCHEDULE

Site: Lidl: Havant
Project Schedule Ref: JSL5098_750
Drawing Reference: JSL5098_700
Survey date: 16/02/2024

Surveyor: R.Carthew
Status: For Planning
Revision: -
Notes: -

Ref. no	Species	Height (m)	Canopy Spread (m) N	E	S	W	Crown Area	Stem dia. (mm)	Stem no. at 1.5m	Height of crown clearance (m)	FSB Height (Direction)	Age class	Condition	General Observations Management Recommendations	Estimated remaining contribution (yrs)	Tree Quality Category (BS5837)
T24	Salix caprea (Goat Willow)	10	5	0.5	0.5	5	24	150 150	2	4	4 (W)	EM	Fair/Poor	Heavy stem bias to Northwest, minor deadwood, wounds on both stems.	10+	C2
T25	Betula pendula (Silver Birch)	15	3	4	4	4	44	300	1	2	3 (S)	EM	Fair	Growing on embankment, ivy on main stem, large secondary leader from 3m.	20+	B2
T26	Salix caprea (Goat Willow)	15	4	4	4	4	50	200 200 100 150 200 100	6	3	2 (SE)	M	Fair/Poor	Multiple stems with included unions, wound on base of main stem, moderate deadwood, sparse crown.	10+	C2
T27	Crataegus monogyna (Hawthorn)	5	2	2	2	2	13	150	1	1	0.5 (S)	SM	Fair	Unremarkable tree.	10+	C2
T28	Acer pseudoplatanus (Sycamore)	12.5	2	2	2	2	13	200	1	6	-	SM	Fair/Poor	Wounds around base of stem, moderate deadwood throughout sparce crown.	10+	C2
T29	Salix caprea (Goat Willow)	12.5	2	4	5	2	33	150 150 150 150 150 150	6	3	1.5 (S)	M	Fair/Poor	Multiple stems with included unions, moderate deadwood, sparse crown.	10+	C2
T30	Salix caprea (Goat Willow)	12.5	2	4	5	2	33	400 300	2	3	1.5 (S)	M	Fair/Poor	Stems bifurcates at just below 1.5m, moderate deadwood, sparse crown.	10+	C2
T31	Acer pseudoplatanus (Sycamore)	12.5	2.5	1	1	1	5	200	1	6	-	SM	Fair/Poor	Wounds around base of stem, minor deadwood throughout crown.	10+	C2
T32	Pinus nigra 'maritima' (Corsican Pine)	15	3	3	3	3	28	400	1	2	3 (S)	EM	Fair	Ivy on main stem to mid crown.	20+	B2
T33	Salix caprea (Goat Willow)	12.5	3	2	1	2	12	150 150	2	3	2 (N)	M	Fair/Poor	Unremarkable tree.	10+	C2
T34	Salix caprea (Goat Willow)	12.5	6	5	5	3	69	250 250 250	3	3	0.5 (W)	M	Fair/Poor	Moderate deadwood, sparse crown, ivy on st2m to inner crown.	10+	C2

Note: This survey is based on a brief visual inspection from the ground.
It is not intended as a full arboricultural inspection.
- indicates estimated/offsite tree. * - indicates off site tree. FSB - First Signifigant Branch.

TREE SURVEY SCHEDULE

Site: Lidl: Havant
Project Schedule Ref: JSL5098_750
Drawing Reference: JSL5098_700
Survey date: 16/02/2024

Surveyor: R.Carthew
Status: For Planning
Revision: -
Notes: -

Ref. no	Species	Height (m)	Canopy Spread (m) N	E	S	W	Crown Area	Stem dia. (mm)	Stem no. at 1.5m	Height of crown clearance (m)	FSB Height (Direction)	Age class	Condition	General Observations Management Recommendations	Estimated remaining contribution (yrs)	Tree Quality Category (BS5837)
T35	Salix caprea (Goat Willow)	12.5	7	3	3	2	39	200 150 100	3	6	-	M	Fair/Poor	Moderate deadwood, sparse crown, ivy on stem to inner crown.	10+	C2
T36	Fraxinus excelsior (Ash)	12.5	3	2	2	2	16	250	1	8	-	EM	Poor	Major deadwood, epicormic growth is only live crown.	<10	U
T37	Salix caprea (Goat Willow)	12.5	7.5	7	6	5	125	350 300 250	3	4	-	M	Fair/Poor	Moderate deadwood, sparse crown, ivy on stem to inner crown.	10+	C2
T38	Crataegus monogyna (Hawthorn)	10	3	2	2	4	24	150 150	2	2	3 (NW)	EM	Fair	Unremarkable tree.	10+	C2
T39	Fraxinus excelsior (Ash)	15	3	5	4	4	50	270	1	8	5 (W)	EM	Fair/Poor	Deadwood throughout crown.	10+	C2
T40	Fraxinus excelsior (Ash)	15	4	4	4	4	50	270	1	8	5 (W)	EM	Fair/Poor	Deadwood throughout crown.	10+	C2
T41	Fraxinus excelsior (Ash)	10	3	3	3	3	28	250	1	3	2 (N)	EM	Poor	Moderate deadwood, sparse crown.	10+	C2
T42	Fraxinus excelsior (Ash)	10	3	3	3	3	28	200	1	3	2 (N)	EM	Poor	Moderate deadwood, sparse crown.	10+	C2
T43	Fraxinus excelsior (Ash)	10	3	3	3	3	28	150	1	3	2 (N)	EM	Poor	Moderate deadwood, sparse crown.	10+	C2
T44	Fraxinus excelsior (Ash)	12.5	2.5	2.5	2.5	2.5	20	100	1	4	-	SM	Fair	Unremarkable tree.	10+	C2
T45	Quercus robur (Common Oak)	10	5	5	4	3	55	200	1	4	3 (N)	SM	Fair	Good potential.	20+	B2
T46	Quercus robur (Common Oak)	10	5	2	4	4	44	200	1	2	2 (N)	SM	Fair	Stem bifurcates at 2m, crown bias to West.	20+	B2

Note: This survey is based on a brief visual inspection from the ground.
It is not intended as a full arboricultural inspection.
- indicates estimated/offsite tree. * - indicates off site tree. FSB - First Signifigant Branch.

TREE SURVEY SCHEDULE

Site: Lidl: Havant
Project Schedule Ref: JSL5098_750
Drawing Reference: JSL5098_700
Survey date: 16/02/2024

Surveyor: R.Carthew
Status: For Planning
Revision: -
Notes: -

Ref. no	Species	Height (m)	Canopy Spread (m) N	E	S	W	Crown Area	Stem dia. (mm)	Stem no. at 1.5m	Height of crown clearance (m)	FSB Height (Direction)	Age class	Condition	General Observations Management Recommendations	Estimated remaining contribution (yrs)	Tree Quality Category (BS5837)
T47	Quercus robur (Common Oak)	12	4	2	2	3	24	200	1	3	4 (N)	SM	Fair	Growing in dense cluster of scrub.	20+	B2
T48	Quercus robur (Common Oak)	12	2	2	3	3	19	200	1	1	1 (SW)	SM	Fair	Growing on embankment, ivy on lower stem.	20+	B2
T49	Fraxinus excelsior (Ash)	5	2	2	3	3	19	100 100	2	1	-	SM	Fair	Unremarkable tree.	10+	C2
T50	Pinus sylvestris (Scots Pine)	15	7	6	6	5	112	500	1	3	3 (N)	EM	Fair	Prominent tree with open crown, some minor deadwood and one large deadwood snag from previous branch failure.	20+	B1
G1	Populus alba (White Poplar)	15	-	-	-	-	-	200 (avg.)	-	2	-	EM	Fair	Group of leggy poplar ivy on main stems, all have stem bias to n/ Northeast due to pressure from scrub group.	20+	B2
G2	Crataegus monogyna (Hawthorn)	10	-	-	-	-	-	150 (avg.)	-	1	-	EM	Fair	Unremarkable group of trees along fenceline.	10+	C2
G3	Crataegus monogyna (Hawthorn),Salix caprea (Goat Willow)	7.5	-	-	-	-	-	200 (avg.)	-	1	-	M	Fair	Unremarkable group of mostly hawthorn growing along wide drainage ditch.	10+	C2
G4	Betula pendula (Silver Birch),Acer pseudoplatanus (Sycamore),Ilex aquifolium (Holly),Crataegus monogyna (Hawthorn),Fraxinus excelsior (Ash)	10	-	-	-	-	-	100 (avg.)	-	0	-	SM	Fair	Unremarkable area of scrub with some small trees.	10+	C2
G5	Crataegus monogyna (Hawthorn),Pinus sylvestris (Scots Pine),Quercus cerris (Turkey Oak),Prunus avium (Wild Cherry),Salix caprea (Goat Willow)	10	-	-	-	-	-	300 (avg.)	-	0	-	EM	Fair	Unremarkable group of shrubs and trees along boundary.	20+	B2

Note: This survey is based on a brief visual inspection from the ground.
It is not intended as a full arboricultural inspection.
- indicates estimated/offsite tree. * - indicates off site tree. FSB - First Signifigant Branch.

Appendix A

Tree Constraints Plan

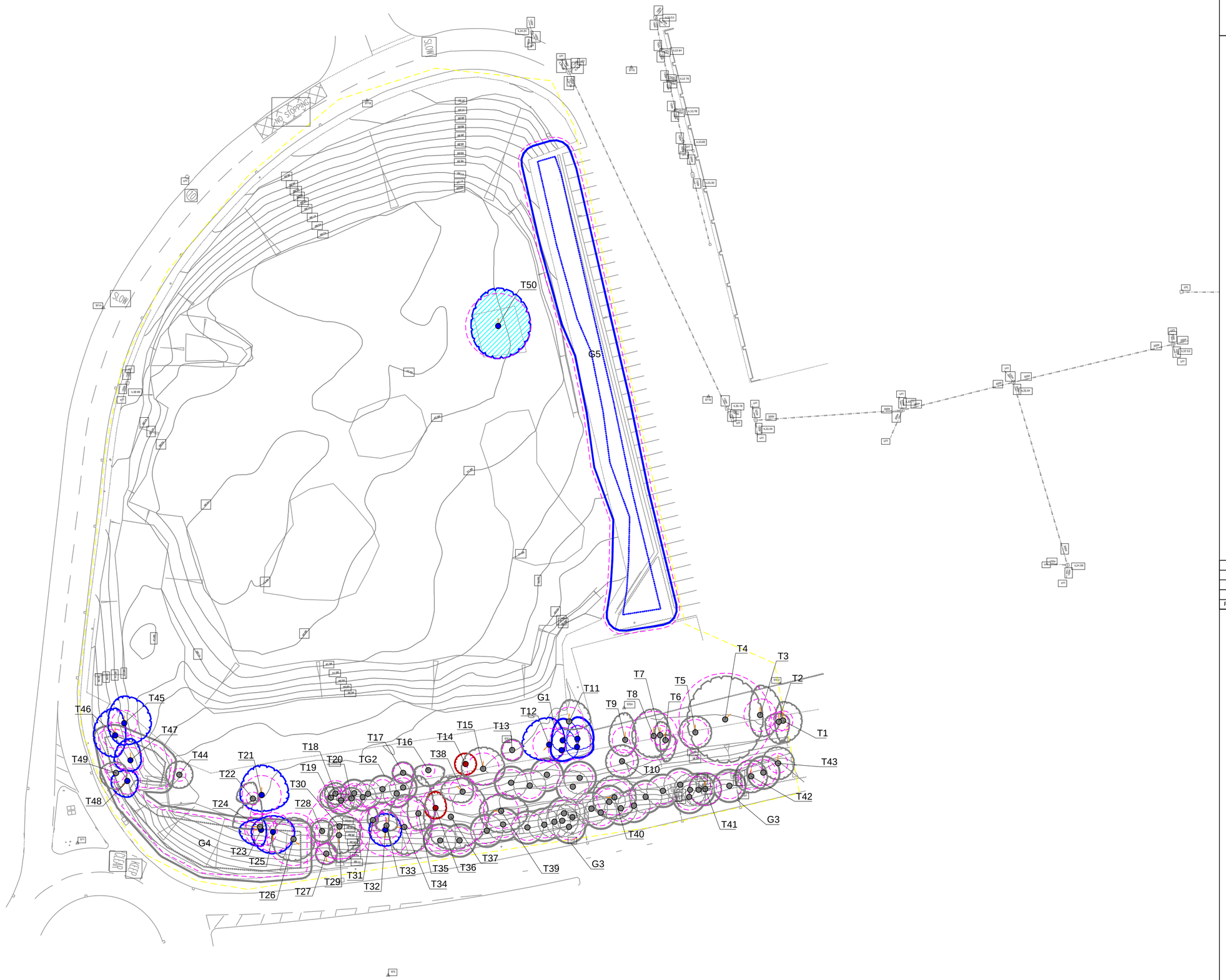

© 2023 RPS Group

Notes

1. This drawing has been prepared in accordance with the scope of RPS's appointment with its client and is subject to the terms and conditions of that appointment. RPS accepts no liability for any use of this document other than by its client and only for the purposes for which it was prepared and provided.
2. If received electronically it is the recipients responsibility to print to correct scale. Only written dimensions should be used.
3. Where applicable Ordnance Survey (c) Crown Copyright 2023
   All rights reserved. Licence number 0100031673

Key

Survey boundary.

Tree with numbered reference.
Canopy spread and coloured BS5837:2012 tree quality category as shown below.
= Tree details estimate (inaccessible tree)
* = Tree in off site location

G1 Tree group plotted with individual stem locations and numbered reference. Canopy extents coloured to match BS5837:2012 tree quality category as shown below.

G1 Tree or Vegetation group with numbered reference.Canopy extents coloured to match BS5837:2012 tree quality category as shown below and dashed line to show indicative stem line.

H1 Hedge with numbered reference.
Canopy extents and coloured BS5837:2012 tree quality category as shown below and dashed line to show hedge centerline.

W1 Woodland with numbered reference.
Canopy extents coloured to match BS5837:2012 tree quality category as shown below and dashed line to show indicative tree line.

BS 5837:2012 Tree Quality Categories - Table 1

- Category A - High quality
- Category B - Moderate quality
- Category C - Low quality
- Category U - Unsuitable for retention

Direction of first significant branch

Root protection area (RPA)
Calculated in accordance with Section 4.6 - BS5837:2012

G1 Tree protected by Tree Preservation Order No. 1216 served by Havent BC.

NOTES:

- Refer to RPS Tree Survey Report & Schedule for further details.
- Survey based on a visual inspection from the ground and is not intended as a full arboricultural inspection.
- Plan produced in accordance with recommendations set out in BS 5837:2012 - 'Trees in Relation to design, demolition and construction'.
- Due to the legal protection afforded to breeding birds vegetation removal should not take place during the bird nesting period; generally, although not restricted to, March - August inclusive.
- Survey based upon topographic survey produced by EDI Surveys LTD in June, 2023

Scale Bar
0m 10m 25m

N

Rev	Description	By	CB	Date

MAKING COMPLEX EASY
A TETRA TECH COMPANY
Lakesbury House, Hiltingbury Road, Chandlers Ford, Hampshire SO53 5SS
T: 02380 810 440 **E:** rpsso@rpsgroup.com

Client: LIDL Great Britain

Project: LIDL: Purbrook Way, Havent

Title: Tree Constraints Plan

Status	Drawn By	PM/Checked by
For Information	RC	DC

Job Ref	Scale @ A2	Date Created
JSL5098	1:500	February 2024

RPS Drawing / Figure Number	Rev
700	-

rpsgroup.com

\\sou-lh-fs-01\projects\5000 Series\5098 - Lidl Havant 2024 (WH)\Tech\ACAD\Current\JSL5098_700 - TCP.dwg

Appendix B

Tree Removal & Protection Plan

© 2023 RPS Group

Notes

1. This drawing has been prepared in accordance with the scope of RPS's appointment with its client and is subject to the terms and conditions of that appointment. RPS accepts no liability for any use of this document other than by its client and only for the purposes for which it was prepared and provided.
2. If received electronically it is the recipients responsibility to print to correct scale. Only written dimensions should be used.
3. Where applicable Ordnance Survey (c) Crown Copyright 2023 All rights reserved. Licence number 0100031673

Key

Survey boundary.

Tree with numbered reference.
Canopy spread and coloured BS5837:2012 tree quality category as shown below.
= Tree details estimate (inaccessible tree)
* = Tree in off site location

G1 Tree group plotted with individual stem locations and numbered reference. Canopy extents coloured to match BS5837:2012 tree quality category as shown below.

G1 Tree or Vegetation group with numbered reference.Canopy extents coloured to match BS5837:2012 tree quality category as shown below and dashed line to show indicative stem line.

H1 Hedge with numbered reference.
Canopy extents and coloured BS5837:2012 tree quality category as shown below and dashed line to show hedge centerline.

W1 Woodland with numbered reference.
Canopy extents coloured to match BS5837:2012 tree quality category as shown below and dashed line to show indicative tree line.

BS 5837:2012 Tree Quality Categories - Table 1

- Category A - High quality
- Category B - Moderate quality
- Category C - Low quality
- Category U - Unsuitable for retention

Direction of first significant branch

Root protection area (RPA)
Calculated in accordance with Section 4.6 - BS5837:2012

(G1) Tree protected by Tree Preservation Order No. 1216 served by Havent BC.

Tree to be removed with numbered reference. Canopy spread and BS5837:2012 tree quality category.

TPF Temporary protective fencing in accordance with Section 6.2 - BS5837:2012. See inset details for example details.

Underground service diversions

NOTES:

- Refer to RPS Tree Survey Report & Schedule for further details.
- Survey based on a visual inspection from the ground and is not intended as a full arboricultural inspection.
- Plan produced in accordance with recommendations set out in BS 5837:2012 - 'Trees in Relation to design, demolition and construction'.
- Due to the legal protection afforded to breeding birds vegetation removal should not take place during the bird nesting period; generally, although not restricted to, March - August inclusive.
- Survey based upon topographic survey produced by EDI Surveys LTD in June, 2023
- Pedestrian/ vehicular emergency access routes to be maintained at all times.
- All protective fencing to be completed and approved by LPA / CA prior to commencement of any site works.
- All works to conform with requirements of:
  BS 3998:2010 - Tree Works
  BS 5837:2012 - Trees in relation to design, demolition and construction

Rev	Description	By	CB	Date
C	Arboricultural matters revised	DC	DC	10.07.24
B	Layout updated	MW	DC	17.6.24
A	Layout updated	DC	DC	03.24

MAKING COMPLEX EASY
A TETRA TECH COMPANY

Lakesbury House, Hiltingbury Road, Chandlers Ford, Hampshire SO53 5SS

T: 02380 810 440 **E:** rpsso@rpsgroup.com

Client: LIDL Great Britain

Project: LIDL: Purbrook Way, Havant

Title: Tree Removal & Protection Plan

Status	Drawn By	PM/Checked by
For Information	RC / MW	DC

Job Ref	Scale @ A2	Date Created
JSL5098	1:500	June 2024

RPS Drawing / Figure Number	Rev
701	C

rpsgroup.com

P:\5000 Series\5098 - Lidl Havant 2024 (WH)\Tech\ACAD\Current\JSL5098_701C - TPP.dwg

Appendix C

Example Tree Protection Barriers (BS5837:2012 Fig 2 & 3)

Figure 2 **Default specification for protective barrier**

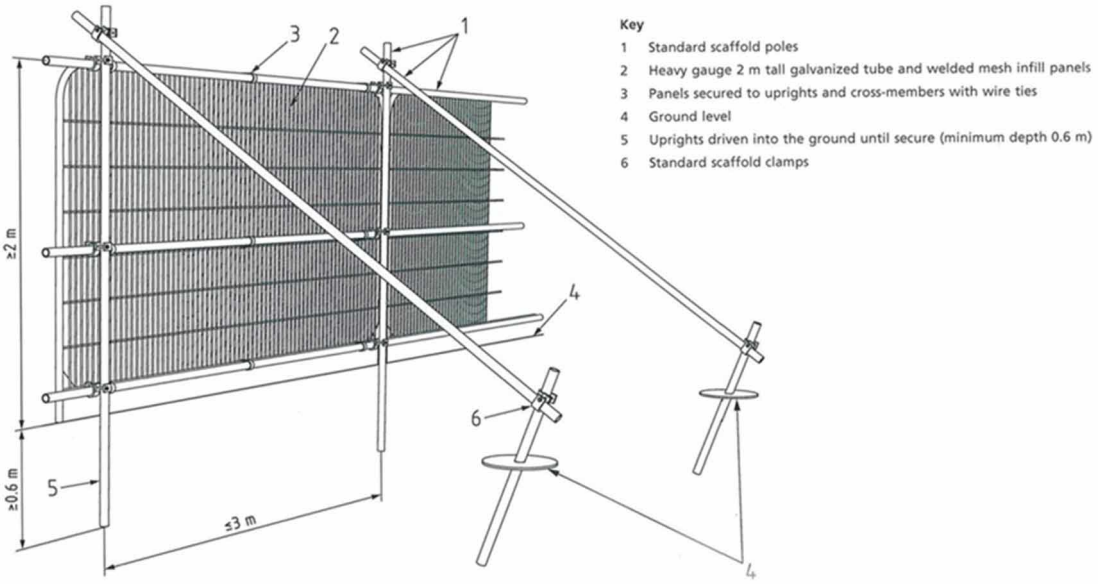

Figure 3 **Examples of above-ground stabilizing systems**

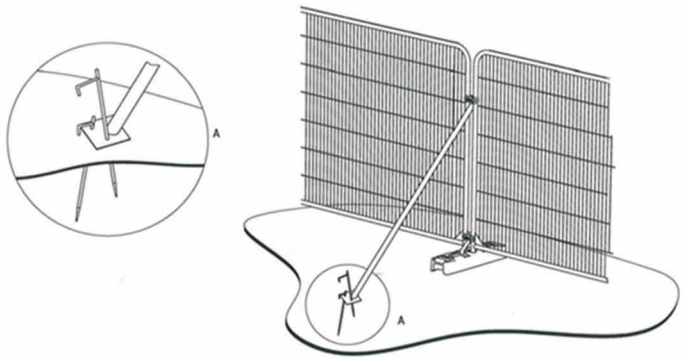

a) Stabilizer strut with base plate secured with ground pins

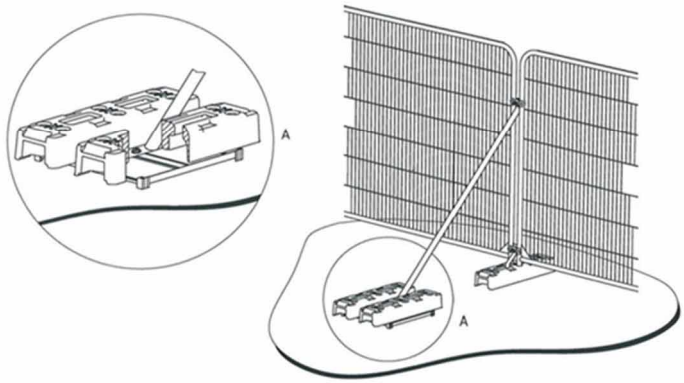

b) Stabilizer strut mounted on block tray

Appendix D

Construction Exclusion Zone (CEZ) Sign

Appendix E

Arboricultural Glossary

Age-class - A general classification of the tree into either - young, semi-mature, early mature, mature, over-mature, or veteran.

Apical Bud/Shoot – The apical bud, also known as the leading shoot, is responsible for shoot extension and is dominant.

Apical Dominance – A singular, leading shoot remains dominant.

Arboreal - In connection with, or in relation to, trees.

Arboriculturist – Person who has, through relevant education, training and experience, gained recognised qualifications and expertise in the field of trees in relation to construction.

Arboricultural Implications Assessment (AIA) – Study, undertaken by an arboriculturist, to identify, evaluate and possibly mitigate the extent of direct and indirect impacts on existing trees that may arise as a result of the implementation of any site layout proposal.

Arboricultural Method Statement (AMS) – Methodology for the implementation of any aspect of development that has the potential to result in the loss of or damage to a tree. Note The AMS is likely to include details of an on-site tree protection monitoring regime.

Asymmetric crown- Crowns that have a morphological bias in a particular direction. This can give the tree an aesthetically unfavourable appearance but can also subject the tree to uneven wind- loading forces and potentially result in failure.

Basal – Referring to the bottom part of a tree's stem.

Basifugal mortality – A natural process seen in trees in an advanced life stage whereby the trees extremities die back, and the inner crown expresses new growth, in order to conserve energy reserves.

Bifurcated - A growth characteristic, where two stems of similar size grow from the same point. Can create an inherent weakness.

Branch union/junction - The point at which a branch joins a larger stem. Can be a point of weakness, especially in certain species.

Brown Rot- Decay caused by certain species of fungus which results in the affected wood becoming brittle and liable to suddenly 'break out', especially if in key structural areas.

Buttress flares – Extensions of the basal stem of a tree that provide additional structural support. See reaction wood.

Bifurcated- A growth characteristic, where two or more stems of similar size grow from the same point. Can create an inherent weakness.

Cable braces – Cable braces used to support the crown of a tree, reduce impacts caused by wind- throw oscillation.

Canker – A clearly defined area of dead and sunken or malformed bark, caused by bacteria or fungi. Can have a bearing on structural integrity of infected limb(s) depending on size and location.

Central leader- See apical dominance.

Chalara ash dieback- A disease affecting ash trees caused by the fungus *Hymenoscyphus fraxineus*. Usually fatal, the disease causes leaf loss and crown dieback in infected trees. It was first confirmed in Britain in 2012.

Chlorosis- yellowing of leaves which can be caused by a range of factors, often an indicator of nutrient deficiency.

Compaction - The compressing & hardening of soil around tree root systems, due to vehicular/pedestrian use etc. Loss of pore space between soil granules limits water movement and gaseous exchange and inhibits root growth.

Companion shelter- Shelter provided by neighbouring trees in groups to one another, factors such as wind throw are reduced due to supporting branches and interlocking root systems. Removing individual trees on the peripheries of such groups can expose neighbouring trees to environmental factors they have not previously been subjected to and can lead to individual failure.

Competent person – Person who has training and experience relevant to the matter being addressed and an understanding of the requirements of the particular task being approached

Note 1 A competent person understands the hazards and the methods to be implemented to eliminate or reduce the risks that can arise. For example, when on site, a competent person is able to recognise at all times whether it is safe to proceed.

Note 2 A competent person is able to advise on the best means by which the recommendations of this British Standard may be implemented.

Condition – Assessment based on a visual and professional view giving consideration to many factors such as tree health, structural integrity and suitability of its position.

Conservation dead- wooding- Removal of deadwood using ‘coronet cuts’ that mimic the way a branch would naturally break off, maximising deadwood habitat availability for invertebrates.

Coppice - The method of managing trees by cutting the stems at between 1.0 inch and 1.0 foot from the ground level on a regular cycle, the cut stumps of the trees or shrubs are allowed to re-grow many new stems.

Crown spread - Gives distances between extreme limits of the crown and the stem, usually along the four compass points. Helps to show crown symmetry.

Crown Reduction – The removal of branch ends to reduce the extreme limits of a tree's branch spread and height.

Crown Thin – The removal of selected branches within the crown to thin the internal branch structure.

D.B.H. - 'Diameter at Breast Height', an industry standard to gauge tree stem size and development. Within arboriculture, breast height is taken to be 1.5m above ground level.

Dieback - The reduction in crown vigour and extension growth progressing to death of distal parts; often associated with decline.

Epicormic growth - New growth from dormant buds that can often form tenuous attachments. Although some species readily form such shoots, it can be an indication of stress.

Form - A general assessment of the shape and position of the tree within its environment.

Hanger – Term used to describe a branch that has become detached and is being supported by other branches. Can be a hazard to persons and property below.

Hazard Beam – After the loss of a distal part, a limb concentrates growth upwards creating adverse end weights that can render the limb susceptible to failure.

Included bark – Growth characteristic usually caused when two or more stems/branches growing in close proximity 'fuse' together entrapping the bark from when the parts were separate in the middle, creating a structural weakness.

Invertebrate tower – Pollarding of a (usually dead) tree to a safe height that leaves part of the main stem as a deadwood habitat for invertebrate species.

Occlusion/Occluded – Normally used to describe the overgrowth of a wound. Also, immoveable foreign objects in contact with a tree part can become encased or 'occluded' by the tree as it grows incrementally.

Pathogen - An agent that causes disease, especially a living microorganism such as a bacterium or fungus.

Phototropic growth – Growth responding to a light stimulus i.e. the sun. This can influence the form of a tree, particularly where other factors e.g. buildings or other trees, affect the amount/ direction light is received.

Pollard – The removal and subsequent regular re-removal of the crown of a tree above animal browsing height. Can be an effective method of controlling the size of trees in urban areas. This is ideally begun in the trees early stages and maintained throughout its life.

Reaction wood - Essentially additional wood laid down by the tree to compensate for structural defects such as cavities.

Rhizosphere - The rhizosphere is the narrow region of soil that is directly influenced by root secretions and associated soil microorganisms. In particular, mycorrhizal fungi form a symbiotic relationship with trees and assist in the assimilation of phosphates essential to the tree's health.

Ring barking/Girdling – the removal of bark around the entire circumference of a stem or branch, causing the death of all distal parts.

Root Protection Area (RPA) – Layout design tool indicating the area surrounding a tree that contains sufficient rooting volume to ensure the survival of the tree, shown in plan form in m².

Scaffold limbs - The main structural branches within the crown.

Tree Removal & Protection Plan – scale drawing prepared by an arboriculturist showing the finalised layout proposals, tree retention and tree and landscape protection measures detailed within the arboricultural method statement (AMS), which can be shown graphically.

U.L.E – 'Useful Life Expectancy' is an estimate based on currently known factors of the possible remaining life of the tree as an asset. AKA 'Estimated remaining contribution'.

Veteran tree – Tree that, by recognised criteria, shows features of biological, cultural or aesthetic value that are characteristic of, but not exclusive to, individuals surviving beyond the typical age range for the species concerned.

Vigour - A general classification, as to the present and future potential growth and development of a tree. A comment regarding the health status of the tree specific to its species.

White Rot - A type of decay caused by certain species of fungi which results in the affected wood becoming flexible with little compressive strength.