HELLIS
TREE CONSULTANTS

# Tree Report

52 Station Road, Hayling Island, Hampshire PO11 0EL

September 2015

**Report Name:** Tree Report to Support a Planning Application

**Our Reference No.:** 15/07/94/NH

**Author:** Nicholas Hellis, Arboricultural Consultant

**On the instructions of:** Murray Planning Associates
Office 7, Capron House
North Street
Midhurst
West Sussex GU29 9DH

**Office Telephone No.:** 023 9229 0700

**Email:** info@murrayplanning.co.uk

**H ELLIS tree consultants**
4 Bangers, Oborne, Dorset DT9 4JZ
Office: 01935 814 110
Email: admin@hellis.biz
Website: www.hellis.biz

## Summary

This is a tree report to support an application for planning permission.

The report has been written following the recommendations and guidance given within British Standard 5837:2012 Trees in relation to design, demolition and construction.

The proposed development is to construct a single new residential dwelling.

I have inspected all the trees of material consideration within and immediately adjacent to the proposed development site. These trees are listed at Appendix 1 and annotated on the Tree Plan at Appendix 6.

The proposed development does not require the removal of any trees.

The proposed development does require the judicious pruning of T3.

The proposed development will encroach upon the RPAs of T1, T2 and T3 and must be constructed using a limited dig method of construction. The building must be constructed with a ventilated air space between the underside of the floor slab and the existing soil surface ; additionally a specialist irrigation system must be employed e.g. roof run-off redirected under the slab.

The shadow patterns of T1 and T2 will cause partial obstruction of sunlight or daylight to the proposed development.

There are no large trees either on or immediately adjacent to the proposed development that may cause apprehension to occupiers or users of the proposed buildings or spaces.

Due consideration has been given to the proximity of retained trees with allowance and space permitted for their future growth.

Due consideration has been given to the access and working area required to enable the construction of the proposed development.

No overhanging tree canopies should be damaged by the construction activity.

Due consideration will need to be given to the requirements of infrastructure.

The construction activity should not adversely impact upon any retained trees if the specified precautions detailed within the arboricultural method statement included within this report are followed.

Nicholas Hellis
Arboricultural Consultant

## Table of Contents

1.0 Instructions ..... 3
2.0 Report Limitations ..... 3
3.0 Introduction ..... 3
4.0 Report Rationale ..... 4
5.0 Site Survey ..... 4
6.0 Tree Survey ..... 5
7.0 Tree Constraints and Considerations ..... 5
8.0 Arboricultural Impact Assessment ..... 8
9.0 Arboricultural Method Statement ..... 9

Appendix 1 - Tree Survey and Tree Quality Assessment ..... i
Appendix 2 - Cascade Chart for Tree Quality Assessment ..... iv
Appendix 3 - Site Photographs ..... vi
Appendix 4 - Default Specification for a Protective Barrier ..... viii
Appendix 6 - Tree Plan ..... xx

## 1.0 Instructions

1.1 I have been instructed in writing by Mr. Richard Murray of Murray Planning Associates to prepare a tree report to assess the influence that the trees on and adjacent to the site may have on any proposed development and vice versa.

1.2 The proposed development is to construct a single new residential dwelling.

## 2.0 Report Limitations

2.1 Trees are living organisms whose health and overall condition can change rapidly. The conclusions and recommendations contained within this report are valid for a period of three years. The period of validity may be reduced if significant changes occur to either the trees or to the landscape within the immediate proximity of the trees.

## 3.0 Introduction

3.1 The report has been written following the recommendations and guidance given within British Standard 5837:2012 Trees in relation to design, demolition and construction - Recommendations (hereinafter BS:5837).

3.2 The report is intentionally concise with minimal background explanations. Where appropriate, further guidance and information is included as appendices.

3.3 The report contains the following appendices:

a) a tree survey and a tree quality assessment at Appendix 1;

b) a cascade chart for tree quality assessment at Appendix 2;

c) site photographs at Appendix 3;

d) a default specification for a protective barrier at Appendix 4;

e) guidance for working in proximity to existing trees at Appendix 5; and

f) a scale drawing showing existing site features and the proposed development. This drawing has been amended to show tree quality assessment, root protection areas and shadow patterns, as appropriate and should be read in conjunction with this report at Appendix 6.

## 4.0 Report Rationale

4.1 The following rationale underlies this report:

a) to identify the quality and value (in a non-fiscal sense) of the existing tree stock within the context of proposed development, allowing informed decisions to be made concerning which trees should be removed or retained in the event of development occurring;

b) to identify the constraints and considerations, both above and below ground, associated with retained trees in the context of proposed development. However, care should be taken to avoid misplaced tree retention; attempts to retain too many or unsuitable trees on a site can result in excessive pressure on the trees during demolition or construction work, or post-completion demands for their removal;

c) to prepare an arboricultural impact assessment that evaluates the direct and indirect effects of the proposed design and where necessary recommends mitigation; and

d) to describe within an arboricultural method statement how the proposed construction activity can be undertaken with minimal risk of adverse impact on the retained trees.

## 5.0 Site Survey

5.1 The site survey included within the Tree Plan at Appendix 6 contains:

a) the location of all trees, shrub masses, hedges etc. of material consideration;

b) other relevant features, such as buildings, other structures and boundary features;

c) the approximate location of trees on land adjacent to the development site that might influence the site or might be important as part of the local landscape character.

## 6.0 Tree Survey

6.1 The tree survey and tree quality assessment was carried out on the morning of Thursday 6th August 2015.

6.2 The tree survey, at Appendix 1, includes the trees or hedges on the proposed development site and trees or hedges immediately adjacent to the proposed development site that could influence the development or might be important as part of the local landscape character with a stem diameter of 150mm or greater.

6.3 The quality and value of existing trees is allocated to one of four categories, namely A, B, C or U (Unsuitable for retention). The category allocated to each tree depends in part upon the information gathered in the tree survey and in part upon the 'cascade chart for tree quality assessment' contained within BS:5837. It is also in part, subjective.

The trees have been differentiated on the Tree Plan by the colour and shape of the symbol allocated to each category.

## 7.0 Tree Constraints and Considerations

The purpose of this section is to identify the constraints and considerations, both above and below ground, associated with retained trees in the context of proposed development.

7.1 to 7.10 inclusive set out the **general principles** of tree constraints and considerations associated with a proposed development site.

7.11 to 7.20 inclusive set out the tree constraints and considerations associated with **this specific site**.

### General Principles

7.1 In order to avoid damage to the roots or rooting environment of retained trees, the Root Protection Area (RPA) is plotted around category A and B trees as necessary to illustrate potential constraints to the proposed development. This area should be left undisturbed. However, where construction is proposed within the RPA, technical solutions may be available to enable the successful retention of trees.

7.2 The current height of category A and B trees may be annotated on the Tree Plan where this would cause unreasonable obstruction of sunlight to the development. This is represented by a segment, with a radius from the centre of the stem, equal to the current or estimated height of the tree. It is drawn from due North West to due East indicating the shadow pattern through the main part of the day.

7.3 To maximize the probability of successful tree retention a realistic assessment of the probable impact of any proposed development on the trees and vice versa should take into account the characteristics and condition of retained trees, with due allowance and space permitted for their future growth and maintenance requirements.

7.4 The relationship of buildings to large trees can cause apprehension to occupiers or users of nearby buildings or spaces. Buildings and other structures should be sited allowing adequate room for retained trees, and with due allowance and space permitted for their future growth.

7.5 Buildings and open spaces should be designed with due consideration to the proximity of retained trees, especially in terms of the foliage, flowers, fruit and other debris associated with the normal functions of a healthy tree.

7.6 Tree preservation orders, conservation areas or other regulatory tree protection.

7.7 The access and working area required to enable the construction of the proposed development, including the effects of pruning on the amenity value of retained trees.

7.8 The protection of overhanging tree canopies where they could be damaged by construction.

7.9 The requirements of infrastructure including above and below ground services, visibility splays, refuse stores, lighting, signage, solar collectors, satellite dishes and CCTV sightlines.

7.10 The potential for new planting to mitigate proposed tree loss.

### This Specific Site

7.11 The radius of the RPAs of all trees, shrub masses, hedges etc. identified within the tree survey are given in the right hand column of the survey at Appendix 1.

7.12 Indicative RPAs for T1, T3 and T3 are annotated on the Tree Plan.

7.13 The estimated heights of all trees of material consideration on and adjacent to the proposed development site are given in the third column of the tree survey at Appendix 1. The obstruction of sunlight is represented by a segment equal to the estimated height of the tree through the main part of the day.

7.14 Indicative shadow patterns for T1 and T2 are annotated on the Tree Plan.

7.15 There are no large trees either on or immediately adjacent to the proposed development that may cause apprehension to occupiers or users of the proposed buildings or spaces.

7.16 Due consideration has been given to the proximity of the retained trees with allowance and space permitted for their future growth.

7.17 I have not contacted the local planning authority to determine whether any or all of the trees on the proposed development site are legally protected i.e. the subject of a Tree Preservation Order or contained within a Conservation Area.

7.18 Due consideration has been given to access and working area required to enable the construction of the proposed development, including the effects of pruning on the amenity value of retained trees.

7.19 No overhanging tree canopies should be damaged by the construction activity.

7.20 Due consideration will need to be been given to requirements of infrastructure including above and below ground services, visibility splays, refuse stores, lighting, signage, solar collectors, satellite dishes and CCTV sightlines.

## 8.0 Arboricultural Impact Assessment

The purpose of this arboricultural impact assessment is to consider the direct and indirect effects of the proposed design.

### Summary of Impact

8.1 I have assessed the impact of the proposed development on the trees, shrubs and woody vegetation (trees) of material consideration, present on and immediately adjacent to the site. All the trees that may be directly affected by the development are listed in Table 1 below.

**Table 1 - Summary of trees that will or may be affected by the proposed development**

| | Category A Trees | Category B Trees | Category C Trees | Category U Trees |
|---|---|---|---|---|
| Trees to be retained | - | T1, T2 and T3 | - | - |
| Trees to be removed | - | - | - | - |
| Retained trees that will or may need to be pruned to enable construction | - | T3 | - | - |
| Retained trees that will or may be affected by encroachment within the RPA | - | T1, T2 and T3 | - | - |

### Detail of Impact

8.2 Trees to be retained: T1, T2 and T3

The proposed development will retain all trees identified within the tree survey and annotated on the tree plan.

8.3 Trees to be removed: None

The proposed development does not require the removal of any trees.

8.4 Retained trees that will or may need to be pruned to enable construction: T3

The proposed development does require the judicious pruning of T3 to remove the major deadwood overhanging the site and provide a 4.5m clearance over the site.

8.5 Retained trees that will or may be adversely affected by encroachment within the RPA: T1, T2 and T3

The proposed development will encroach within the RPAs of T1, T2 and T3 however; the construction activity should not adversely impact upon these trees if the specified precautions detailed within the arboricultural method statement below are followed.

## 9.0 Arboricultural Method Statement

The purpose of this arboricultural method statement is to prescribe how the proposed construction activity can be undertaken with minimal risk of adverse impact on the retained trees.

9.1 to 9.10 inclusive set out the **general principles** of good arboricultural management for a proposed development site.

9.11 to 9.20 inclusive set out the management details that must be followed to ensure successful tree retention on **this specific site**.

### General Principles

9.1 The Tree Plan shows the existing trees numbered and categorised in the context of proposed development. The Tree Plan also shows the approximate location of the proposed protective measures for both existing trees and areas of structural landscaping, as necessary. This plan should only be used for dealing with the tree issues and all scaled measurements should be checked against original documents.

9.2 A default specification for barrier design, taken from BS: 5837, is included at Appendix 4.

9.3 Any RPAs outside the protective barriers must be covered by ground protection, assuming no suitable existing hard surfacing, based on the recommendations within BS: 5837 if there is a significant risk of damage from the demolition and/or construction activity. The precise design and the sequencing of the installation and removal should be agreed with Havant Borough Council on site before any demolition and/or construction activity starts.

9.4 Any work in proximity to existing trees must be done with care as set out at Appendix 5.

9.5 All landscaping activity within RPAs has the potential to cause severe damage and any adverse impact must be minimised by following the guidance set out in Appendix 5.

9.6 It is often difficult to clearly establish the detail of services until the construction is in progress. Where possible, existing services should be used and all new services ought to be outside RPAs of retained trees. However, where existing services within RPAs require upgrading or new services have to be installed in RPAs, trenchless insertion methods ought to be used with entry and retrieval pits being sited outside the RPAs. Provided that roots can be retained and protected, excavation using hand-held tools might be acceptable for shallow service runs. Any adverse impact must be minimised by following the guidance set out in Appendix 5.

9.7 All site storage areas, cement mixing and washing points for equipment and vehicles must be outside RPAs unless otherwise agreed with the local planning authority. Where there is a risk of polluted water runoff into RPAs, heavy-duty plastic sheeting and sandbags must be used to contain the runoff and prevent contamination.

9.8 Tree protection cannot be reliably implemented without arboricultural input. The nature and extent of that input varies according to the complexity of the issues and the resources available on site. An arboricultural consultant must be instructed by the project management team to oversee the implementation of the protective measures and management proposals set out in this arboricultural method statement.

9.9 Arboricultural planning conditions can only be reliably and effectively discharged with supervision by an arboricultural consultant. Such supervision must be confirmed by formal written records circulated to all interested parties. These records will form an auditable system of site monitoring and thus enable planning conditions to be discharged. The project management team must instruct an arboricultural consultant to undertake the required supervision.

The following table outlines the stages and nature of participation of the project arboriculturist to ensure successful tree retention.

| Time Frame | Attendees | Action |
|---|---|---|
| Pre Commencement | Arboricultural Consultant<br>LPA Tree Officer<br>Site Manager | To discuss tree protection measures, arboricultural supervision and notification of interested parties |
| In Progress | Arboricultural Consultant<br>Site Manager | Supervision and notification of agreed tree protection measures. |
| Post Completion | Arboricultural Consultant | Inspection of retained trees and notification as agreed |

9.10 It is the site manager's responsibility to ensure that the details of this arboricultural method statement and any agreed amendments are known and understood by all site personnel. Copies of the agreed documents must be kept on site and be readily available at all times. This method statement should form part of the site induction for all personnel.

### This Specific Site

9.11 The following sets out the management details that must be followed to ensure successful tree retention. It is based on the guidelines and recommendations set out in BS: 5837 and the National Joint Utilities Group: Guidelines for the planning, installation and maintenance of utility services in proximity to trees. Volume 4, issue 2. London: NJUG, 2007. (NJUG 4).

9.12 Protective Barriers: an indicative location for the protective barriers is shown on the Tree Plan; the precise location of the barriers, their design and the sequencing of their installation and removal must be agreed with Havant Borough Council on site before any construction activity starts. No activities whatsoever shall take place within the protected barriers without the prior written agreement of Havant Borough Council.

9.13 Ground protection within RPAs of retained category A or category B trees: the RPAs of T1, T2 and T3 outside the protective barriers must be covered by ground protection capable of supporting any traffic entering or using the site without being distorted or causing further compaction of underlying soil.

9.14 Construction (excluding hard surfacing and new infrastructure) within RPAs of T1, T2 and T3: the proposed dwelling must be constructed using a limited dig method of construction, please refer to the Structural Engineers report for specific details. The building must be constructed with a ventilated air space between the underside of the floor slab and the existing soil surface to enable gaseous exchange and venting through the soil surface; additionally a specialist irrigation system must be employed e.g. roof run-off redirected under the slab.

9.15 Installation or removal of hard surfacing within RPAs of T1 and T2: the proposed new driveway within the RPAs of T1 and T2 must follow the guidelines set out within Arboricultural Practice Note No.12 entitled Through the Trees to Development published by the Arboricultural Advisory and Information Service. Additionally, it will be necessary to install the CellWeb 'Tree Root Protection System' manufactured by Geosynthetics, within this designated area. The required cell dimensions will need to be confirmed with Geosynthetics, prior to installation. Furthermore it is advisable to follow the CellWeb TRP Installation Checklist for the installation of the CellWeb Cellular Confinement System within the Root Protection of Trees.

9.16 Soft landscaping within RPAs of T1, T2 and T3: all soft landscaping activity within RPAs of T1, T2 and T3 has the potential to cause severe damage and any adverse impact must be minimised by following the guidance set out in Appendix 5.

9.17 Installation of new services below ground and within RPAs or above ground and within the crown spread of T1, T2 and T3: all new services within the RPAs and within the crown spread of T1, T2 and T3 have the potential to cause severe damage and any adverse impact must be minimised by following the guidance set out in Appendix 5.

9.18 Work within areas of designated structural landscaping: there are no areas of designated structural landscaping on this site.

9.19 The activities on this site that require participation of the project arboriculturist and the number and/or frequency of site visits must be agreed with Havant Borough Council prior to the commencement of any construction activity.

It is anticipated that the project arboriculturist will or may be required to supervise the following activities:

a) site access, movement and parking of construction traffic,
b) location of construction yard and storage areas,
c) location and installation of barriers, ground protection and signage,
d) recommended tree works,
e) maintenance of barriers, ground protection and signage,
f) changes in soil levels within any RPAs,
g) excavation within any RPAs,
h) compaction within any RPAs,
i) installation or removal of hard surfaces within RPAs,
j) soft landscaping within RPAs, and
k) inspection of retained trees. 023 92446526

9.20 Useful contact details:

| | | |
|---|---|---|
| Nick Hellis | Arboricultural Consultant | 01935 814 110 |
| Tree Officer | Havant Borough Council | 023 9244 6526 |
| To be provided | Site Manager | To be provided |
| Richard Murray | Planning Consultant | 02392 290 700 |
| Charlie Boher | Architect | 01730 816 336 |

Signed: [redacted]

Dated: 22nd September 2013

Nicholas Hellis MArborA

Arboricultural Consultant

HELLIS tree consultants

# Appendix 1 - Tree Survey and Tree Quality Assessment

## Tree Survey and Tree Quality Assessment

| Tree No. | Species | Height (m) | Stem Diameter (mm) | Average Crown Spread NESW (m) | Existing Branches | Life Stage | Observations Recommendations Management | Contribution in years | Category | RPA radius (m) |
|---|---|---|---|---|---|---|---|---|---|---|
| **T1** | Yew | 13.0 | 750 | N: 2.0<br>E: 4.0<br>S: 5.0<br>W: 4.0 | Can'py:1.8 | Middle | A good example of a yew tree | 40+ | B1 | 9.00 |
| **T2** | Yew | 9.0 | 250, 270, 200 & 300 | 6.0 | Can'py:2.0 | Middle | A tree of moderate quality | 40+ | B1 | 6.00 |
| **T3** | Oak | 9.0 | 760 | N: 5.0<br>E: 8.0<br>S: 7.0<br>W: 5.0 | Can'py:2.0 | Middle | A moderate volume of major and minor deadwood mainly found in the south aspect over the site. Existing concrete pad beyond the ditch on the west aspect.<br><br>**Crown lift to 4.5m agl and remove major deadwood on south aspect** | 40+ | B1 | 9.00 |

agl: above ground level #: estimated dimension
tree works required by proposed development are noted in **bold orange** type
**T:** Individual tree **H:** Hedgerow or garden hedge **G:** Cohesive group of trees **W:** Woodland

Tree survey schedule:

a) an sequential reference number for each tree or group of trees (also recorded on the Tree Plan);

b) species (common names only);

c) estimated height in metres;

d) stem diameter measured in millimetres typically at 1.5 metres above ground level;

e) estimated branch spread in metres taken at the four cardinal points, as appropriate; (also recorded on the Tree Plan, as appropriate);

f) existing height above ground level of canopy;

g) life stage as follows,

   i. young - a tree in the first third of average life expectancy for species.
   ii. middle - a tree in the middle third of average life expectancy for species.
   iii. mature - a tree in the last third of average life expectancy for species.
   iv. over mature - a mature tree, which by reason of its physical or structural condition, has an estimated remaining contribution of less than 20 years
   v. veteran - ‘a tree which, because of its great age, size or condition is of exceptional value culturally, in the landscape or for wildlife’ English Nature.

h) observations, particularly of structural and/or physiological condition, as appropriate and pertinent to the matter being considered;

i) management recommendations, as appropriate;

j) estimated remaining contribution in years e.g. less than 10, 10+, 20+, 40+;

k) a category is allocated to each tree or group of trees depending in part upon the information gathered in the tree survey, it depending in part upon the ‘cascade chart for tree quality assessment’ at Appendix 2 and it is in part, subjective; and

l) rpa is based on the guidance given within BS: 5837.

# Appendix 2 - Cascade Chart for Tree Quality Assessment

## Cascade Chart for Tree Quality Assessment (April 2012)

| Category and definition | Criteria (including subcategories where appropriate) | | | Identification on Plan |
|---|---|---|---|---|
| **Trees unsuitable for retention** | | | | |
| **Category U**<br>Trees in such a condition that they cannot realistically be retained as living trees in the context of the current land use for longer than 10 years | Trees that have a serious, irremediable, structural defect, such that their early loss is expected due to collapse, including those that will become unviable after removal of other category U trees (e.g. where, for whatever reason, the loss of companion shelter cannot be mitigated by pruning)<br>Trees that are dead or are showing signs of significant, immediate, and irreversible overall decline<br>Trees infected with pathogens of significance to the health and/or safety of other trees nearby, or very low quality trees suppressing adjacent trees of better quality<br><br>*NOTE: Category U trees can have existing or potential conservation value which it might be desirable to preserve* | | | **DARK RED** |
| **Trees to be considered for retention** | | | | |
| | **1. Mainly arboricultural qualities** | **2. Mainly landscape qualities** | **3. Mainly cultural values, including conservation** | **Identification on plan** |
| **Category A**<br>Trees of high quality<br>with an estimated remaining life expectancy of at least 40 years | Trees that are particularly good examples of their species, especially if rare or unusual; or those that are essential components of groups or formal or semi-formal arboricultural features (e.g. the dominant and/or principal trees within an avenue) | Trees, groups or woodlands of particular visual importance as arboricultural and/or landscape features | Trees, groups or woodlands of significant conservation, historical, commemorative or other value (e.g. veteran trees or wood-pasture) | **LIGHT GREEN** |
| **Category B**<br>Trees of moderate quality<br>with an estimated remaining life expectancy of at least 20 years | Trees that might be included in category A, but are downgraded because of impaired condition (e.g. presence of significant though remediable defects, including unsympathetic past management and storm damage), such that they are unlikely to be suitable for retention for beyond 40 years; or trees lacking the special quality necessary to merit the category A designation | Trees present in numbers, usually growing as groups or woodlands, such that they attract a higher collective rating than they might as individuals; or trees occurring as collectives but situated so as to make little visual contribution to the wider locality | Trees with material conservation or other cultural value | **MID BLUE** |
| **Category C**<br>Trees of low quality<br>with an estimated remaining life expectancy of at least 10 years, or young trees with a stem diameter below 150 mm | Unremarkable trees of very limited merit or such impaired condition that they do not qualify in higher categories | Trees present in groups or woodlands, but without this conferring on them significantly greater collective landscape value; and/or trees offering low or only temporary/transient landscape benefits | Trees with no material conservation or other cultural value | **GREY** |

# Appendix 3 - Site Photographs

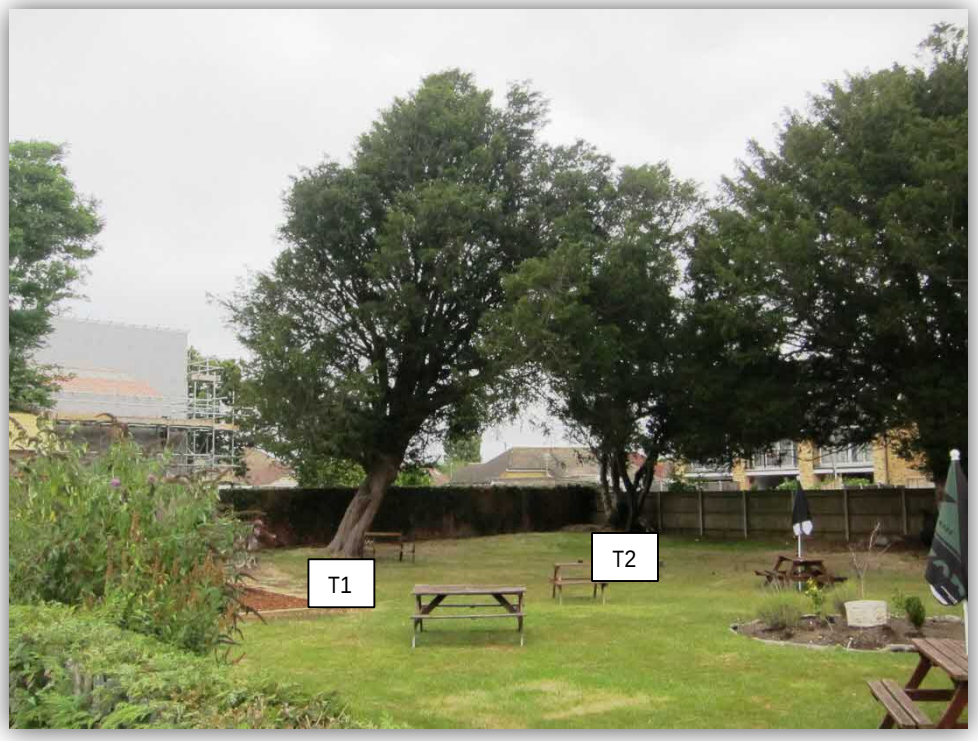


Photo 1: Yews trees T1 and T2 with the curtilage of West Town Hotel

Photo 2: Oak, T3, on the north boundary of the proposed site

# Appendix 4 - Default Specification for a Protective Barrier

## Default Specification for a Protective Barrier

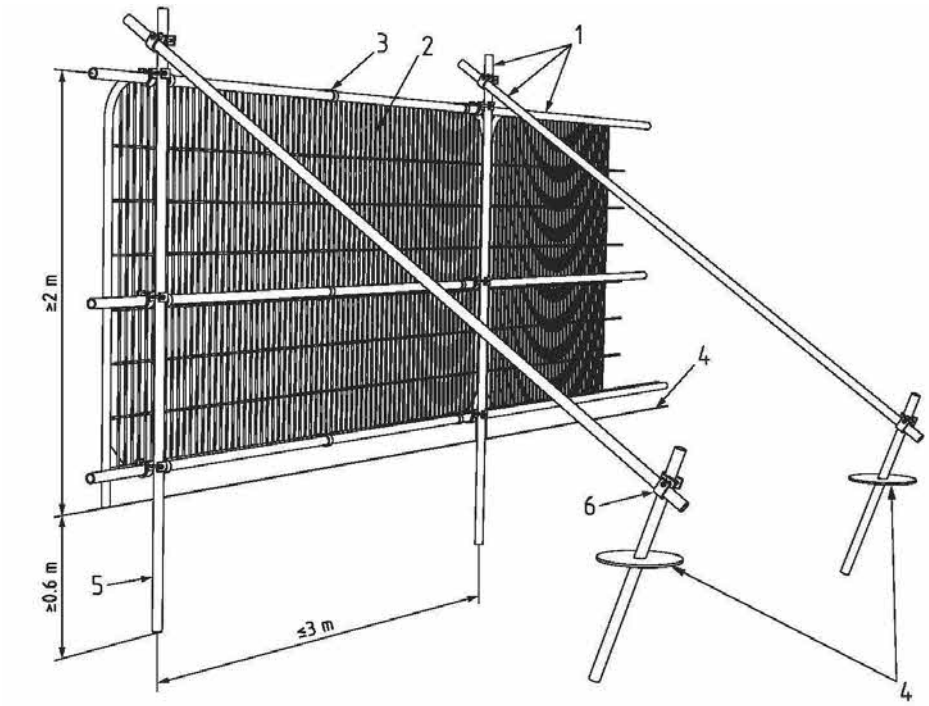


**Key**

1 Standard scaffold poles
2 Heavy gauge 2 m tall galvanized tube and welded mesh infill panels
3 Panels secured to uprights and cross-members with wire ties
4 Ground level
5 Uprights driven into the ground until secure (minimum depth 0.6 m)
6 Standard scaffold clamps

The default specification should consist of a vertical and horizontal scaffold framework, well braced to resist impacts, as illustrated above. The vertical tubes should be spaced at a maximum interval of 3 m and driven securely into the ground. Onto this framework, welded mesh panels should be securely fixed.

Reference: BS 5837:2012 Section 6.2.2 Barriers

# Appendix 5 - Guidance for Working in Proximity to Existing Trees

## Guidance for Working in Proximity to Existing Trees

### 1.0 Demolition and construction in proximity to existing trees

1.1 Construction within the RPA should accord to the principle that the tree and soil structure take priority, and the most reliable way to ensure this is to preserve the RPA completely undisturbed. Soil structure should be preserved at a suitable bulk density for root growth and function (of particular importance for soils of a high fines content), existing rootable soil retained and roots themselves protected.

1.2 The ability of a tree to tolerate some disturbance and alteration of its growing conditions depends on specific circumstances, including prevailing site conditions, and in general, the older the tree, the less successfully it will adapt to new conditions.

1.3 Where alternative design solutions are not available such that construction is proposed within the RPA, the potential impact of the proposals on the tree should be assessed. Details of design proposals should be developed in conjunction with the project arboriculturist and, where required, input from a suitably qualified engineer.

### 2.0 Avoiding physical damage to the roots during demolition or construction

2.1 To avoid damage to tree roots, existing ground levels should be retained within the RPA. Intrusion into soil (other than for piling) within the RPA is generally not acceptable, and topsoil within it should be retained in situ. However, limited manual excavation within the RPA might be acceptable, subject to justification. Such excavation should be undertaken carefully, using hand-held tools and preferably by compressed air soil displacement.

2.2 Roots, whilst exposed, should immediately be wrapped or covered to prevent desiccation and to protect them from rapid temperature changes. Any wrapping should be removed prior to backfilling, which should take place as soon as possible.

Photo1: Air soil displacement

Photo 2: Temporary ground protection

2.3 Roots smaller than 25 mm diameter may be pruned back, making a clean cut with a suitable sharp tool (e.g. bypass secateurs or handsaw), except where they occur in clumps. Roots occurring in clumps or of 25 mm diameter and over should be severed only following consultation with an arboriculturist, as such roots might be essential to the tree's health and stability.

2.4 Prior to backfilling, retained roots should be surrounded with topsoil or uncompacted sharp sand (builders' sand should not be used because of its high salt content, which is toxic to tree roots), or other loose inert granular fill, before soil or other suitable material is replaced. This material should be free of contaminants and other foreign objects potentially injurious to tree roots.

## 3.0 Tree protection during demolition

3.1 Where demolition is proposed on a site where trees are to be retained, access facilitation pruning should be undertaken as necessary to prevent injurious contact between demolition plant and the tree(s). In some cases, working space may be provided by temporarily tying back tree branches. Pruning or tying should be undertaken in accordance with a specification prepared by an arboriculturist.

3.2 When demolishing a structure (including underground structures) within what would otherwise be the RPA, barriers should be erected, and ground protection installed to protect the underlying soil to the edge of the existing structure.

3.3 All plant and vehicles engaged in demolition works should either operate outside the RPA, or run on the ground protection. Where such ground protection is required, it should be installed prior to commencement of operations.

3.4 Where trees stand adjacent to structures to be removed, the demolition should be undertaken inwards within the footprint of the existing building (often referred to as "top down, pull back").

3.5 The advice of an arboriculturist should be sought where underground structures present within the RPA are, or will become, redundant. In general it is preferable to leave such structures in situ, as their removal could damage adjacent tree roots.

3.6 Where an existing hard surface is scheduled for removal, care should be taken not to disturb tree roots that might be present beneath it. Hand-held tools or appropriate machinery should be used (under arboricultural supervision) to remove the existing surface, working backwards over the area, so that the machine is not moving over the exposed ground. If a new hard surface is to be laid, it might be preferable to leave any existing sub-base in situ, augmenting it where required.

## 4.0 Permanent hard surfacing within the RPA

The following does not apply to veteran trees, where it is recommended that no construction, including the installation of new hard surfacing, occurs within the RPA.

**4.1** Where permanent hard surfacing within the RPA is considered unavoidable, site-specific and specialist arboricultural and construction design advice should be sought to determine whether it is achievable without significant adverse impact on trees to be retained.

### Design

Photo 3: 3D Cellular confinement system

**4.2** The design should not require excavation into the soil, including the lowering of levels and/or scraping, other than the removal, using hand tools, of any turf layer or other surface vegetation.

**4.3** The structure of the new hard surface should be designed to avoid localized compaction by evenly distributing the loading over the track width and wheelbase of any vehicles expected to use the access.

**4.4** New permanent hard surfacing should not exceed 20% of any existing unsurfaced ground within the RPA.

**4.5** If the new surface is likely to be subject to de-icing salt application, an impermeable barrier should be incorporated to prevent contamination of the rooting area. Run-off should be directed away from the RPA.

4.6 Where a permeable surface is to be used by vehicular traffic, a geotextile should be used at the base of construction to help prevent pollution contamination of the rooting area below.

Photo 4: Geo textile membrane

4.7 Permeable hard surfacing can result in soil volume moisture content remaining at or near field capacity for long periods. Where there is a risk of waterlogging, the design should incorporate appropriate land drainage. Land drainage within the RPA should be designed to avoid damage to the tree and the soil structure, e.g. sand slitting formed by compressed air soil displacement with the slits set radially to the tree.

4.8 The hard surface should be resistant to or tolerant of deformation by tree roots, and should be set back from the stem of the tree and its above-ground root buttressing by a minimum of 500 mm to allow for growth and movement. Resulting gaps may be filled using appropriate inert granular material.

4.9 When designing the hard surface, account should be taken of finished levels in relation to adjacent structures, including damp-proof courses, garage slabs and links to existing vehicular cross-overs.

4.10 If a permeable surface is to be used by construction traffic, this should be protected with a temporary sacrificial surface laid over a geotextile separator to ensure that its permeability is retained.

### Edge supports

4.11 The excavation needed for the placement of kerbs, edgings and their associated foundations and haunchings can damage tree roots. Within the RPA, this should be avoided either by the use of alternative methods of edge support or by not using supports at all.

### Precautions

4.12 The soil structure including the area beneath the proposed new hard surface should be protected from compaction during installation. This may be achieved by:

a) the use of temporary ground protection in accordance to safeguard the working area;
b) constructing the new surface with machinery working forward from the surface as it is constructed (known as “rolling out”).

4.13 Where a herbicide is used to control vegetation prior to construction of hard surfacing, the manufacturer’s guidance should be strictly followed and care should be taken to avoid any damaging effects on trees or other vegetation to be retained.

4.14 The ground should not be skimmed to establish the new hard surface at the former ground level. Loose organic matter and/or turf should be removed carefully using hand tools. The new surface should then be established above the soil.

4.15 Raising levels should be achieved by use of a granular material which remains gas- and water-permeable throughout its design life.

4.16 Due to the highly alkaline leachate produced during the curing of wet concrete, concrete should not be poured within the RPA unless an impermeable liner has been installed.

## 5.0 Special engineering for foundations within the RPA

5.1 The use of traditional strip footings can result in extensive root loss and should be avoided. The insertion of specially engineered structures within RPAs may be justified if this enables the retention of a good quality tree that would otherwise be lost (usually categories A or B). Designs for foundations that would minimize adverse impact on trees should include particular attention to existing levels, proposed finished levels and cross-sectional details. In order to arrive at a suitable solution, site-specific and specialist advice regarding foundation design should be sought from the project arboriculturist and an engineer.

5.2 Root damage can be minimized by using:

a) piles, with site investigation used to determine their optimal location whilst avoiding damage to roots important for the stability of the tree, by means of hand tools or compressed air soil displacement, to a minimum depth of 600 mm;
b) beams, laid at or above ground level, and cantilevered as necessary to avoid tree roots identified by site investigation.

5.3 Where a slab for a minor structure (e.g. shed base) is to be formed within the RPA, it should bear on existing ground level, and should not exceed an area greater than 20% of the existing unsurfaced ground.

5.4 Slabs for larger structures (e.g. dwellings) should be constructed with a ventilated air space between the underside of the slab and the existing soil surface (to enable gas exchange and venting through the soil surface). In such cases, a specialist irrigation system should also be employed (e.g. roof run-off redirected under the slab). The design of the foundation should take account of any effect on the load-bearing properties of underlying soil from the redirected roof run-off.

5.5 Where piling is to be installed near to trees, the smallest practical pile diameter should be used. If a piling mat is required, this should conform to the parameters for temporary ground protection. The pile type should be selected bearing in mind the need to protect the soil and adjacent roots from the potentially toxic effects of uncured concrete, e.g. sleeved bored pile or screw pile.

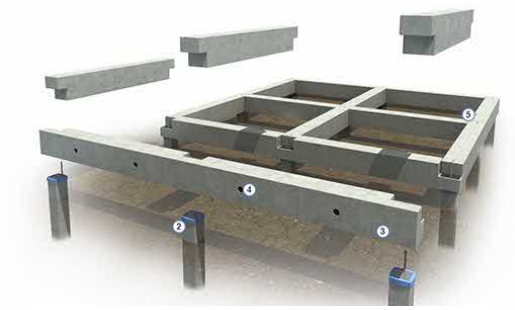

Photo 5: Driven pile foundation with a ventilated air space

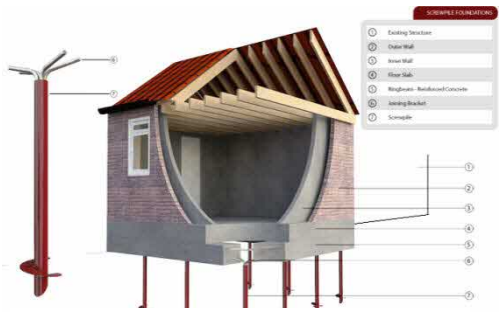

Photo 6: Screw pile foundation with a ventilated air space

## 6.0 Subterranean construction within the RPA

6.1 Where it is proposed to form subterranean structures, e.g. basement extensions, within the RPA, it is essential to avoid excavating down through rootable soil if trees are to be retained. In some cases, it might be technically possible to form the excavation by undermining the soil beneath the RPA.

6.2 The following factors should be taken into account, in light of site-specific and specialist arboricultural, engineering and geotechnical advice:

a) the future growth potential of the tree;
b) the minimum depth of overburden (i.e. that overlying the roof of the proposed structure) required for retention in situ to ensure the survival of the tree and its stability against the wind;
c) the potential for vibration-induced granular flow within the retained overburden, caused by the undermining process, to destabilize the tree through reduced root adhesion;
d) the mass of the tree and of the retained overburden;
e) the potential for ponding (i.e. perched water table) and the need for a drainage/runoff control system;
f) the potential adverse effects on local soil hydrology, and the possible impact of these on tree health.

## 7.0 Above and below ground services

7.1 Particular are should be taken in the route and methods of installation of all underground services. Wherever possible, services should be routed outside RPAs. Where this is not possible, it is preferable to keep services together in common ducts. Inspection chambers should be sited outside the RPA.

7.2 Where underground services are to pass within the RPA, detailed plans showing the proposed route should be drawn up in conjunction with the project arboriculturist. In such cases, trenchless insertion methods should be used with entry and retrieval pits being sited outside the RPA. Provided that roots can be retained and protected excavation using hand-held tools might be acceptable for shallow service runs.

Photo 7: Trenchless insertion of services

7.3 Above-ground services (including CCTV cameras and lighting) should be sited to avoid the need for detrimental tree pruning. In this regard, the current and future crown size of the tree should be assessed. Tree branches can be pruned back with care to provide space, though it is not appropriate for repetitive and significant tree work to be an initial design solution unless this is a suitable management outcome for the tree. Pruning should be undertaken in accordance with BS 3998:2010.

7.4 Where utility operations do not require planning permission, including those performed by statutory undertakers, they should still be undertaken in accordance with the above principles. As a minimum standard, such operations should be undertaken in accordance with NJUG Volume 4, issue 2 [N1].

## 8.0 Drainage

8.1 New development can have an effect on the existing drainage pattern and ground water levels of a site, due to level changes, increased areas of hard surface and new drainage installations. The root systems of mature trees do not generally adapt as well as younger specimens to alterations to groundwater.

Expert advice on both drainage and trees should be taken where groundwater conditions are liable to change.

## 9.0 Hard surfaces

9.1 Where surfaces adjacent to new tree planting locations are paved, the settlement of the soil in tree pits which occurs gradually after planting can cause movement of the paved area, including the partial collapse or instability of paving or disruption of flexible surfaces, where these are laid over prepared pits.

Adjacent paving should therefore be retained and supported by a conventional edging and sub-base set at a distance where it is unlikely to be affected by settlement. Where this is not feasible, the outer edges of the backfilled area of the tree pit should be treated as a transition zone, using interlocking surface reinforcement grids backfilled with a flexible surface dressing of a permeable, granular material (e.g. gravels, shingles, other aggregates) which will allow for minor movement and can be topped up if required.

9.2 Where load-bearing paving is to be laid over pits, it should:

a) incorporate a below ground structural system; or
b) incorporate a purpose-designed tree grille with appropriate support around the edges; or
c) utilize structural soil from an approved source (i.e. a composite material that is certified as capable of enabling root growth and development while supporting likely surface loadings); or
d) be laid when the soil has settled and the level made good.

9.3 Due allowance should be made for the future growth of stem and roots of a tree when determining the finished dimensions and the design of edge or kerb treatments of tree pits and planted areas. Where necessary, precautions should be taken at the time of planting to limit future surface distortion near trunks, e.g. by the use of technical solutions such as root deflectors.

9.4 Where there is a risk of damage to the tree arising from intrusion within the tree planting station area (e.g. by vehicles in car parks), an above-ground barrier, such as bollards or fencing, should be incorporated into the design to provide appropriate physical protection.

9.5 Where there is risk of a tree pit receiving surface water run-off that might be contaminated by de-icing salt, either species that are known to be sensitive to salt damage should be avoided, or impermeable paving should be designed and laid to fall away from the pit.

Further advice is available on request regarding topsoil quality and amelioration, soil compaction and remediation, use of mulch, use of herbicides, pre and post development of existing and new trees.

# Appendix 6 - Tree Plan

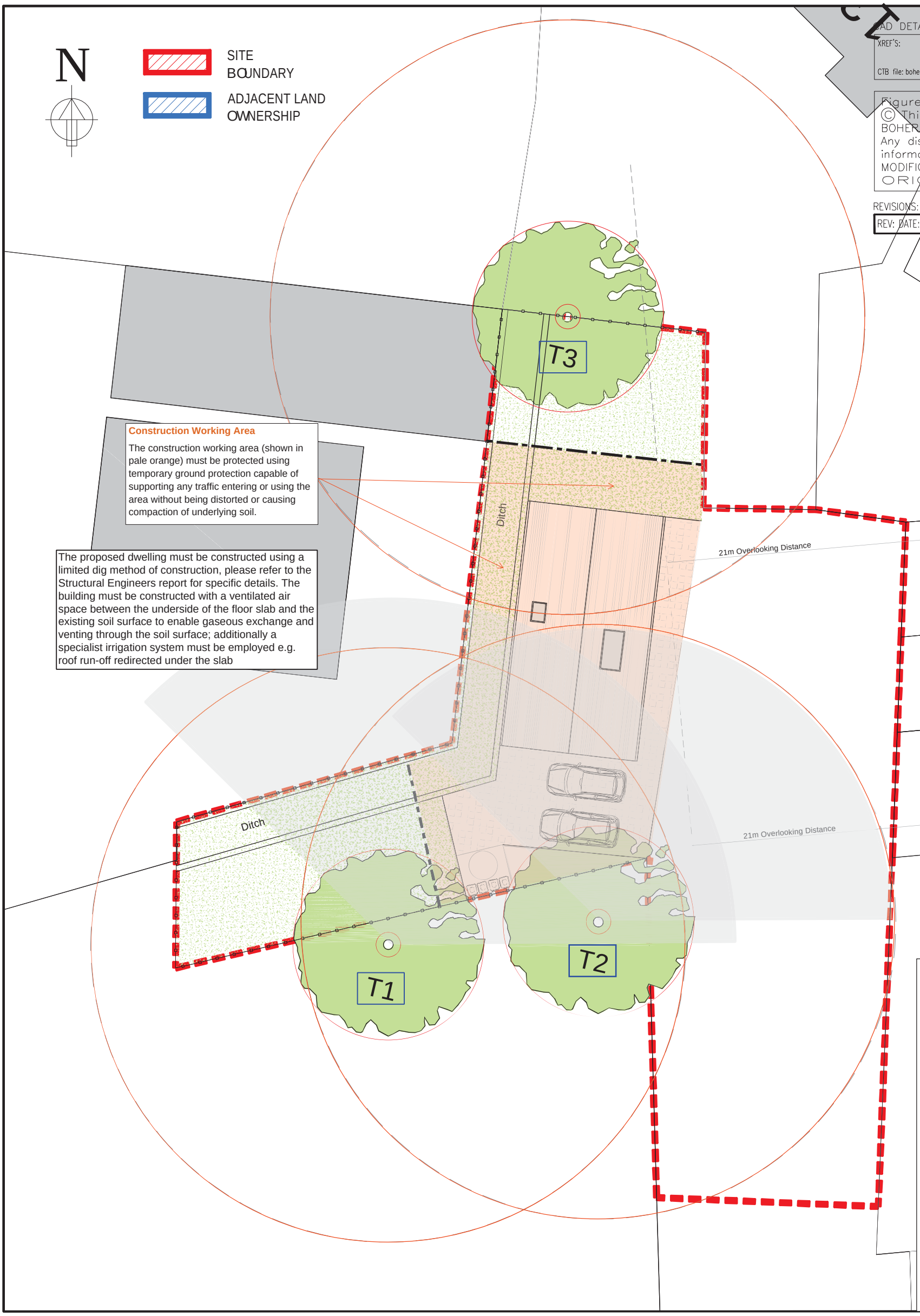


**Construction Working Area**

The construction working area (shown in pale orange) must be protected using temporary ground protection capable of supporting any traffic entering or using the area without being distorted or causing compaction of underlying soil.

The proposed dwelling must be constructed using a limited dig method of construction, please refer to the Structural Engineers report for specific details. The building must be constructed with a ventilated air space between the underside of the floor slab and the existing soil surface to enable gaseous exchange and venting through the soil surface; additionally a specialist irrigation system must be employed e.g. roof run-off redirected under the slab

CAD DETAILS
XREF'S:
CTB file: boherarchitecture

Figured dimens
© This drawing
BOHER ARCHITECT
Any discrepancies
information shall
MODIFICATIONS to
ORIGINAL

REVISIONS:
REV: DATE: REVISION:

## Tree Quality Assessment

- Category A
- Category B
- Category C
- Category U

**Protective Barriers and Supervision**

Protective Barriers must be fit for the purpose of excluding construction activity and appropriate to the degree and proximity of work taking place around the retained tree.

Barriers must be maintained to ensure that they remain rigid and complete.

The barriers must be installed before the commencement of any demolition or construction activity.

The project arboriculturist must visit the site to confirm the agreed protection measures and formal written records of supervision must be circulated to all interested parties.

**Specification for Ground Protection**

a) for pedestrian movements only, a single thickness of scaffold boards placed either on top of a driven scaffold frame, so as to form a suspended walkway, or on top of a compression-resistant layer (e.g. 100 mm depth of woodchip or sharp sand), laid onto a geotextile membrane;

b) for pedestrian-operated plant up to a gross weight of 2 t, proprietary, inter-linked ground protection boards placed on top of a compression-resistant layer (e.g. 150 mm depth of woodchip or 150mm of sharp sand), laid onto a geotextile membrane;

c) for wheeled or tracked construction traffic exceeding 2 t gross weight, an alternative system (e.g. proprietary systems or pre-cast reinforced concrete slabs) to an engineering specification designed in conjunction with arboricultural advice, to accommodate the likely loading to which it will be subjected.

- Indicates the direction and extent of direct sunlight through the main part of the day
- Standard root protection area described as a circle
- Protective barrier

HELLIS
TREE CONSULTANTS

4 Bangers, Oborne, Sherborne, Dorset DT9 4JZ
Office: 01935 814 110
Email: admin@hellis.biz
Website: www.hellis.biz

Project: 52 Station Road, Hayling Island

Title: Tree Plan ref: TP52

Date: September 2015

Based on a drawing provided by Boher Architecture

The purpose of this plan is to illustrate issues associated with the trees present on and immediately adjacent to the site.

The original of this drawing was produced in colour – a monochrome copy should not be relied upon.

EN D