APPENDIX A

Sarah Allen

From: Philcox, Mark <[redacted]
Sent: 29 May 2015 10:34
To: Glenn Charles
Cc: Jenkins, Stephen; Jack Owen
Subject: RE: Land South of Bartons Rd TA Scoping assessment

Glenn,

As stated to Jack Owen previously the trips rates used within the eventual TA would need to be backed up by relevant data e.g. from TRICS data of similar sites and for private dwellings only as an outline application.

The methodology for trip distribution based upon traffic survey information is sound – although further data will need to be referenced to determine the turning proportions out of the proposed site access. In this instance, an assessment of 5 years from year of application will be suitable. Also as stated within your scoping note a Framework Travel Plan will be required to support the development.

Regards

Mark

From: Glenn Charles [[redacted]]
Sent: 28 May 2015 16:42
To: Philcox, Mark
Cc: Jenkins, Stephen; Jack Owen
Subject: RE: Land South of Bartons Rd TA Scoping assessment

Mark,
Many thanks for your note. Are able to confirm that the methodology, trip rates etc we have identified in the scoping note are acceptable as well?

Regards Glenn Charles
B. Eng. C.Eng MICE MIE (Aust)
Managing Director

C & A Consulting Engineers LTD
Offices 8 & 9,
Aldershot Enterprise Centre
Mandora House
Louise Margaret Road
Aldershot Surrey
GU11 2PW (Use 2DD for Sat Nav)
TDL: 01256 630831

Also at:
Office 17, Wealden Place
Bradbourne Vale Road
Sevenoaks
Kent
TN13 3QQ
T : 01732 448120

07436 563862
[redacted]
www.c-a.uk.com
Linked in profile

Registered in England No. 08136641. Registered office: Office 17 Wealden Place Bradbourne Vale Road Sevenoaks Kent TN13 3QQ
For our disclaimer go to : - www.c-a.uk.com/disclaimer

From: Philcox, Mark [redacted]
Sent: 28 May 2015 16:40

To: Glenn Charles
Cc: Jenkins, Stephen; Jack Owen
Subject: RE: Land South of Bartons Rd TA Scoping assessment

Glenn,

As discussed on the phone, your proposed scope of junction assessment and associated traffic surveys appears to be a good base for your assessment. The inclusion of an ATC on Bartons Road would be beneficial. Obviously, Hampshire County Council would take a view as to whether any further junctions would need to be assessed once the impacts of your assessment work are known.

Regards

Mark

Mark Philcox
Principal Transport Planner
Strategic Transport
Economy, Transport & Environment
Hampshire County Council, The Castle, Winchester, SO23 8UJ
T[redacted]
E-mail: [redacted]

From: Glenn Charles [redacted]
Sent: 27 May 2015 16:40
To: Philcox, Mark
Cc: Jenkins, Stephen; Jack Owen
Subject: Land South of Bartons Rd TA Scoping assessment

Mr Philcox,
It would be greatly appreciated if you would contact me urgently on the number below, regarding the scoping exercise for the above site. We need to organise surveys before the summer school break and require confirmation that the locations we have suggested are acceptable.

Regards
Glenn Charles Beng CPEng MICE MICE (Aust)
Managing Director

C & A Consulting Engineers LTD
Office 19, Hart House
Priestly Road, Basingstoke
Hampshire, RG24 9PU
T: 01256 630831

Also At:
Office 17 Wealden Place
Bradbourne Vale Road
Sevenoaks Kent
TN13 3QQ
01732 441769

[redacted]
www.c-a.uk.com
Linked in profile

*** This email, and any attachments, is strictly confidential and may be legally privileged. It is intended only for the addressee. If you are not the intended recipient, any disclosure, copying, distribution or other use of this communication is strictly prohibited. If you have received this message in error, please contact

Charles & Associates Consulting Engineers ltd
Office 19, Hart House, Priestley Road
Basingstoke, RG24 9PU
Tel: 01256 630830
Fax: 01256 324943
E-mail: enquiries@c-a.uk.com
Web: www.c-a.uk.com

C & A CONSULTING ENGINEERS

TECHNICAL NOTE

PROJECT	:	Bartons Road, Havant
JOB NO.	:	14-018
NOTE TITLE	:	Transport & Flood Risk Preliminary Scoping Note
AUTHOR	:	Glenn Charles
APPROVED	:	John Wilde
DATE	:	May 2015

1.0 INTRODUCTION

1.1 This technical note has been prepared as a summary of transport/highways, flood risk and drainage matters related to a potential development of the site at land south of Bartons Road, Havant.

1.2 This preliminary appraisal and scoping note has been prepared with regard to guidance currently available from Hampshire County Council Highways, Havant Borough Council's Planning Policy requirements and Environment Agency guidance.

1.3 This note is presented as a precursor to pre-application discussions with the local planning and highway authorities and, in this regard, is also intended to inform the scoping of written submissions in support of an application. Comments on the suggested scope are therefore welcomed.

2.0 DEVELOPMENT ASSUMPTIONS

2.1 The proposed redevelopment site is located on land south of Bartons Road, Havant, as illustrated in **Figure 1**. The site is bordered to the west / south west by existing residential and employment land uses and by agricultural land to the north and east.

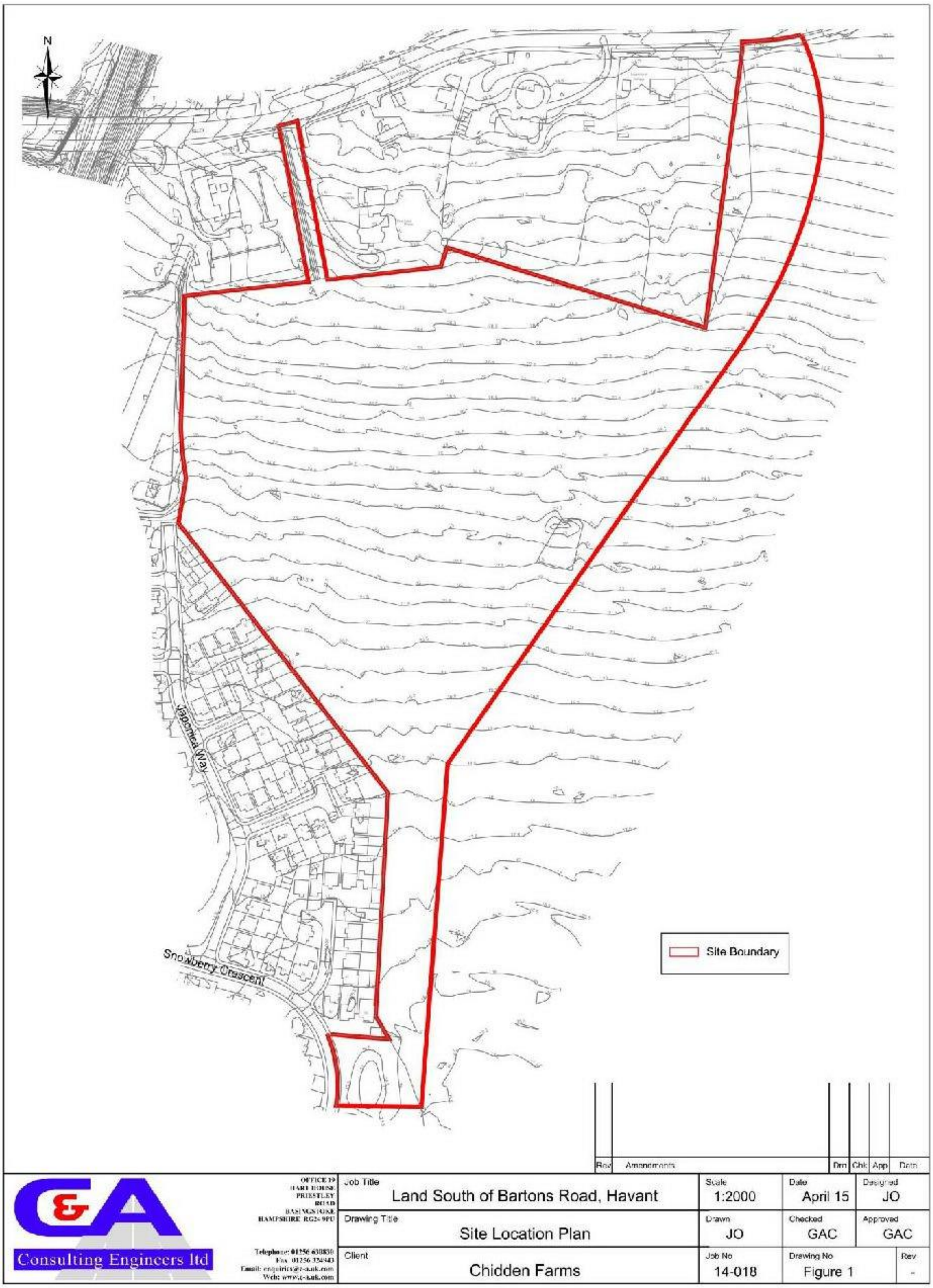
N
Japonica Way
Snowberry Crescent
Site Boundary
Rev
Amendments
Drn
Chk
App
Date
Consulting Engineers ltd
OFFICE 19
HART HOUSE
PRIESTLEY
ROAD
BASINGSTOKE
HAMPSHIRE RG24 9PU
Job Title
Land South of Bartons Road, Havant
Scale
1:2000
Date
April 15
Designed
JO
Drawing Title
Site Location Plan
Drawn
JO
Checked
GAC
Approved
GAC
Client
Chidden Farms
Job No
14-018
Drawing No
Figure 1
Rev
-

2.2 The site is currently an agricultural field and it is proposed to development the site for residential use. The scale of the residential development will fully emerge through the identification of constraints and opportunities at the site, including but not limited to highways, transportation, flood risk and utility services. However, for the purposes of this appraisal an indicative number of 203 dwellings, as has been identified in the Local Plan allocation, have been used.

3.0 SITE ACCESS

3.1 The proposed site access is likely to be situated to the west of the new crematorium access, forming a new staggered junction as shown in Drawing 014/018/002. This drawing is attached as Appendix A.

3.2 The suitability of the access in terms of achieving appropriate visibility will be subject to a thorough appraisal, based on actual speed surveys of the carriageway, plotted on to OS/topographic base data. In addition historic accident data for Bartons Road will be obtained and reviewed accordingly.

3.3 As an outline application all matters, **except access**, will be reserved. However for the purposes of informing the site access design it is assumed that on-site highways will be built to a suitable standards and ultimately made available for adoption to public highway.

4.0 POLICY COMPLIANCE

4.1 The proposed development site benefits from being an allocated site within the Havant Adopted Allocations Plan (July 2014). The site specific development requirements are set out in Policy UE3b and will be considered as part of the scope of the assessment of the site.

4.2 The proposals will be subject to a full review of pertinent transport policy, to be included in the transport submission; including those contained within:

- National Planning Policy Framework
- Hampshire Local Transport Plan 2011-2031
- Havant Adopted Core Strategy
- Havant Adopted Allocations Plan.

4.3 In addition to the above, as a residential scheme, the proposals will be reviewed in the context of Hampshire's Companion Document to the Manual for Streets. However, as an outline scheme, the main aim of the exercise will be to set a context for the proposals and subsequent reserved matters applications, rather than to provide a comprehensive review of the proposals.

5.0 ASSESSMENT

5.1 It is suggested that the scale of changes to the public highway at the site access would be sufficiently material to necessitate a Stage 1 Safety audit to be submitted with the application. In addition, subject to the agreement of the trip generation and distribution to the local highway network, it is possible that the maximum extent of the local network to be reviewed would consist of :

- Site Access / Bartons Road
- Bartons Road / B2148 (Comely Hill)
- Bartons Road / B2149 (Petersfield Road)
- Bartons Road / Eastleigh Road

5.2 It is anticipated that traffic surveys undertaken at the junctions identified above will provide the required trip distribution for the site in its developed state.

5.3 In addition to trip distribution there will be a need to identify a suitable trip generation from the site together with background growth which would need to be allowed for in the assessment up to 5 years from application for HCC. As there are not strategic highways within the immediate vicinity of the site, it is not anticipated that any further future year assessments will be required, nor at this stage, will Highways England need to be consulted on the scope of works.

5.4 The growth factors will be obtained by combining the National Traffic Model (NTM) figures with those from TEMPRO for local adjustment and for the future years.

5.5 The TRICS database will be analysed in order to obtain trip rates for the proposed development. Sites will be selected within TRICS that are of a similar size and have similar characteristics to the development site, for each of the proposed land uses.

5.6 Early reviews suggest that these rates will be in the region of:

	AM Peak Hour			PM Peak Hour		
	Arrivals	**Departures**	**Total**	**Arrivals**	**Departures**	**Total**
Trip Rate (per dwelling)	0.121	0.386	0.507	0.298	0.158	0.456
Trips (203 dwellings)	25	78	103	60	32	92

6.0 SUSTAINABLE ACCESSIBILITY

6.1 The site is located close to employment and residential land uses. There is a local shop located on Snowberry Crescent and Greywell Shopping Centre is within 2km. The nearest primary school is located some 1.2km from the site. The Transport Appraisal will provide a comprehensive review of these destinations, along with an audit of pedestrian and cycle links between these and the site.

6.2 Bus stops are located on Bartons Road, some 700m east of the site as well as on Southleigh Road some 750m to the south. These provide immediate access to the bus services that link to the Havant and other key destinations ensuring that the site has access to public transport. The site is also some 1.25km north of Warblington train station which provides connections to London Victoria, Southampton, Littlehampton and Portsmouth.

6.3 It is understood that improvements to the pedestrian and cycle links are set out in the Havant Adopted Allocations Plan (July 2014) Policy UE3b and this will be incorporated into the site proposals. Again, the Transport Appraisal will review this accessibility to these services and to public transport in general, placing the services in the context of the prevailing requirements.

6.4 In addition, due to the scale of the development, a Framework Travel Plan is proposed to be prepared, which will be the basis of any improvements to pedestrian, cycle and bus facilities.

7.0 FLOOD RISK & SURFACE WATER MANAGEMENT

7.1 Historic mapping currently available from the Environment Agency confirms that the majority of the site falls within Flood Zone 1 with a less than 1 in 1000 year chance of flooding. This is highlighted by surface water flooding in the same location within the EA flood maps as shown on Figure 2 below.

Figure 2 Surface Water Flooding

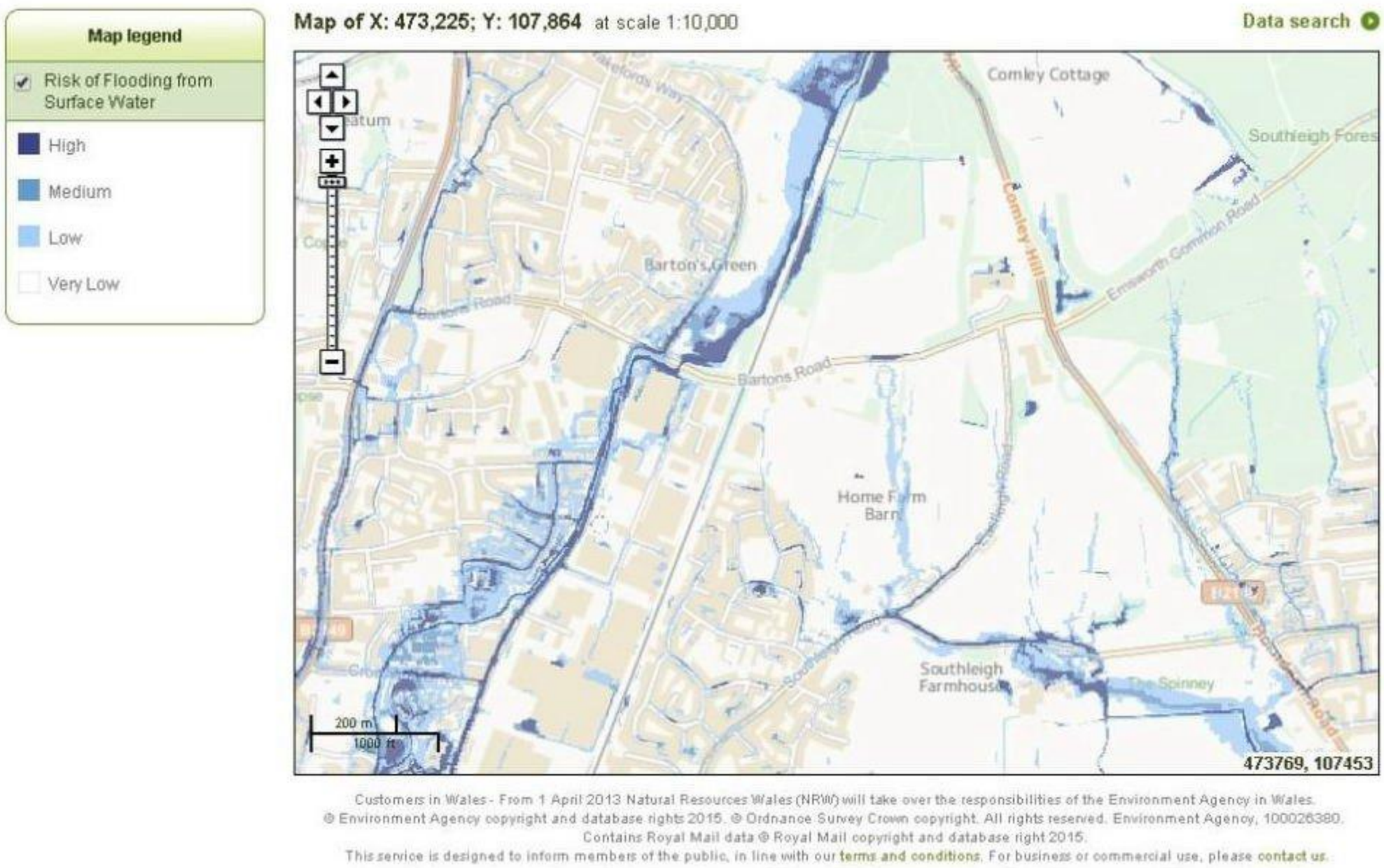

7.2 The preliminary drainage strategy for the site will be to recharge the local ground water via Sustainable Urban Drainage techniques such as infiltration via porous paving, swales etc.

7.3 It is noted that the site has been reviewed within the Council's SHLAA process and Strategic Flood Risk Assessment for the adopted Local Plan. As such under current NPPF guidance the site has already been deemed to pass the required Sequential Test. As such a standard site specific FRA only would be required to progress any planning application for the development of the site.

8.0 SUMMARY

8.1 Although subject to more comprehensive assessment, as detailed above, this preliminary appraisal indicates that a redevelopment to residential use, of circa 203 dwellings, would be appropriate for the site at Bartons Road. The scope of assessment set out above is suggested to be appropriate for fully appraising the site and confirming the validity of this conclusion.

Appendix A

NOTES

1. Do not scale from this drawing.
2. The access to the Crematorium is based on planning drawings from the public domain and the exact position should be checked and varied on site.
3. The position of the new site access is subject to confirmation of the Highway Boundary and Land Ownership.

Rev	Amendments	Dm	Chk	App	Date

Consulting Engineers ltd

OFFICE 17
WEALDEN PLACE
BRADBOURNE VALE ROAD
SEVENOAKS KENT
TN13 3QQ

Telephone: 01732 448120
Fax: 01732 465026
Email: enquiries@c-a.uk.com
Web: www.c-a.uk.com

Job Title
Land South of Bartons Road, Havant

Drawing Title
Preliminary Site Access Plan

Client
Chidden Farms

Scale	Date	Designed
1:500@A1	Apr'15	SB
Drawn	**Checked**	**Approved**
SB	GAC	GAC

Job No	Drawing No	Rev
14-018	14-018-002	-

APPENDIX B

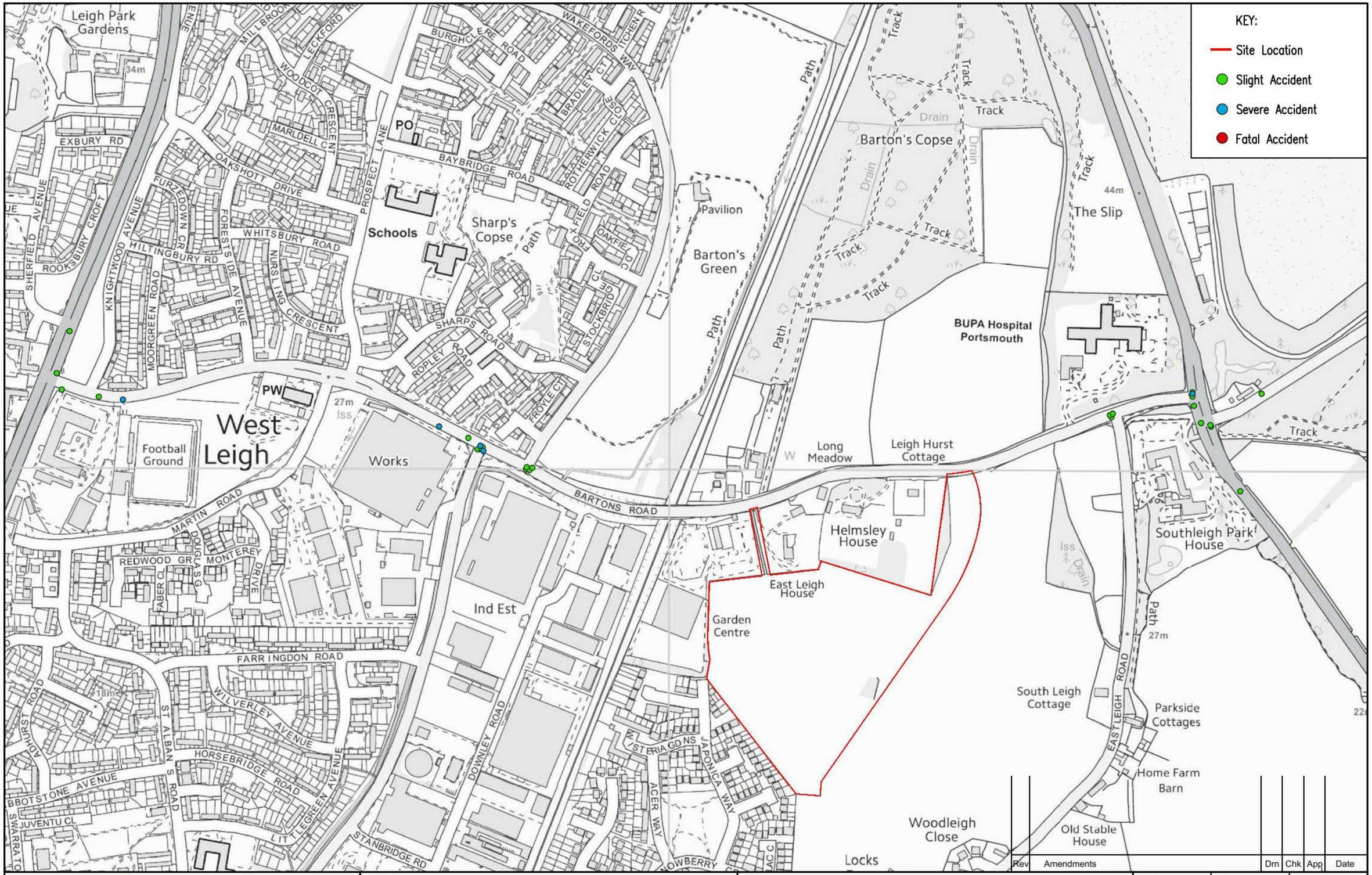

Rev	Amendments	Drn	Chk	App	Date

G&A Consulting Engineers Ltd

Issued by
Offices 8 & 9
Aldershot Enterprise Centre
Mandora House
Louise Margaret Road
Aldershot, Hampshire
GU11 2PW
01252 939000

Office 17, Wealden Place
Bradbourne Vale Road
Sevenoaks, Kent
TN13 3QQ
01732 448120

Job Title: Land South of Bartons Road, Havant

Drawing Title: 5 Year Accident Location Plan

Client: Chidden Farms

Scale	Date	Designed
1:5k	Nov 15	DH
Drawn	**Checked**	**Approved**
DH	SA	DH
Job No	**Drawing No**	**Rev**
14-018	Figure 3	

Accidents between dates **01/07/2010** **and** **30/06/2015** (60) months

Selection:
Selected using Pre-defined Query : ; Refined using Accidents within selected Polygons -HC - RPU Statistics Request ("AW PETERSFIELD ROAD")

Notes:

130209007 08/06/2013 Time 2150 Vehicles 2 Casualties 2 Slight
E:472199 N: 108104 First Road: U Road Type Single carriageway
Speed limit: 30 Junction Detail: T & Stag Jct Give way or controlled Unclassified
Crossing: Control None Facilities: Ped. phase at traffic signal junction Road surface Dry
Darkness: street lights present and lit Fine without high winds
Special Conditions at Site None Carriageway Hazards: None
Place accident reported: At scene DfT Special Projects:

Causation

	Factor:	Participant:	Confidence:
1st:	Failed to judge other persons path or speed	Vehicle 2	Very Likely
2nd:	Exceeding speed limit	Vehicle 2	Very Likely
3rd:	Loss of control	Vehicle 2	Possible
4th:	Impaired by alcohol	Vehicle 2	Possible
5th:	Impaired by drugs (illicit or medicinal)	Vehicle 2	Possible
6th:			

VEH 2 (CAR) TRAVELLING W ALONG BARTONS ROAD AROUND SLIGHT RIGHT HAND BEND COLLIDES WITH NEARSIDE KERB CAUSING VEH TO ENTER THE OPPOSITE CARRIAGEWAY AND COLLIDE WITH ONCOMING VEH 1 (CAR). OCCUPANTS OF VEH 2 RAN FROM THE SCENE.
Occurred on BARTONS ROAD AT JUNCTION WITH KNIGHTWOOD AVENUE, HAVANT, HAMPSHIRE

Vehicle Reference 1 Van or Goods 3.5 tonnes mgw and under Going ahead left bend
Vehicle movement from W to E Other tow Leaving the main road
On main carriageway No skidding, jack-knifing or overturning
Location at impact Cleared junction or waiting/parke First impact Offside Hit vehicle:
Hit object in road None Off road: None
Did not leave carr Age of Driver 54 Male
Not hit and run Breath test Negative
Left hand drive: No

Casualty Reference: 1 Vehicle: 1 Age: 54 Male Driver/rider Severity: Slight
Not a pupil
Seatbelt Not Applicable Cycle helmet: Not a cyclist

Casualty Reference: 2 Vehicle: 1 Age: 55 Male Passenger Severity: Slight
Not a pupil
Seatbelt Not Applicable Cycle helmet: Not a cyclist

Not car passenger

Vehicle Reference 2 Car Going ahead right bend
Vehicle movement from E to W No tow / articulation Leaving the main road
On main carriageway Skidded
Location at impact Jct Approach First impact Front Hit vehicle:
Hit object in road Kerb Off road: None
Did not leave carr Age of Driver Not traced
Hit and run Breath test Driver not contacted
Left hand drive: No

Accidents between dates **01/07/2010** **and** **30/06/2015** (60) months

Selection:
Selected using Pre-defined Query : ; Refined using Accidents within selected Polygons -HC - RPU Statistics Request ("AW PETERSFIELD ROAD")

Notes:

130267612 17/07/2013 Time 1530 Vehicles 2 Casualties 1 Slight
E:472158 N: 108196 First Road: B 2149 Road Type Dual carriageway
Speed limit: 30 Junction Detail: T & Stag Jct Give way or controlled Unclassified
Crossing: Control None Facilities: None within 50m Road surface Dry
Daylight Fine without high winds
Special Conditions at Site None Carriageway Hazards: None
Place accident reported: Elsewhere DfT Special Projects:

Causation

	Factor:	Participant:	Confidence:
1st:	Passing too close to cyclist, horse rider or pedestrian	Vehicle 2	Possible
2nd:	Poor turn or manoevre	Vehicle 2	Possible
3rd:			
4th:			
5th:			
6th:			

VEH 1 (P/CYCLE) WAS TRAVELLING S ALONG B2149 PETERSFIELD ROAD IN LANE 2 WHEN VEH 2 (CAR) ALSO TRAVELLING S IN LANE 1 TURNED RIGHT FOR SHERFIELD AVENUE INTO ITS PATH, CAUSING VEH 1 TO COLLIDE WITH THE OFFSIDE OF VEH 2.
Occurred on B2149 PETERSFIELD ROAD AT JUNCTION WITH SHERFIELD AVENUE, HAVANT, HAMPSHIRE

Vehicle Reference 1 Pedal Cycle Going ahead other
Vehicle movement from N to S No tow / articulation Leaving the main road
On main carriageway No skidding, jack-knifing or overturning
Location at impact Mid Junction - on roundabout or r First impact Front Hit vehicle:
Hit object in road None Off road: None
Did not leave carr Age of Driver 15 Male
Not hit and run Breath test Not applicable
Left hand drive: No

Casualty Reference: 1 Vehicle: 1 Age: 15 Male Driver/rider Severity: Slight
Not a pupil
Seatbelt Not Applicable Cycle helmet: No

Vehicle Reference 2 Car Turning right
Vehicle movement from N to W No tow / articulation Leaving the main road
On main carriageway No skidding, jack-knifing or overturning
Location at impact Leaving main road First impact Offside Hit vehicle:
Hit object in road None Off road: None
Did not leave carr Age of Driver Not traced
Hit and run Breath test Driver not contacted
Left hand drive: No

Accidents between dates **01/07/2010** **and** **30/06/2015** (60) months

Selection:
Selected using Pre-defined Query : ; Refined using Accidents within selected Polygons -HC - RPU Statistics Request ("AW PETERSFIELD ROAD")

Notes:

150016212 15/01/2015 Time 1731 Vehicles 2 Casualties 1 Serious
E:472233 N: 108100 First Road: U Road Type Single carriageway
Speed limit: 30 Junction Detail: Not within 20m of junction
Crossing: Control None Facilities: None within 50m Road surface Wet/Damp
Darkness: street lights present and lit Fine without high winds
Special Conditions at Site None Carriageway Hazards: None
Place accident reported: At scene DfT Special Projects:

Causation

	Factor:	Participant:	Confidence:
1st:	Distraction outside vehicle	Vehicle 1	Possible
2nd:	Failed to judge other persons path or speed	Vehicle 1	Possible
3rd:	Illness or disability, mental or physical	Vehicle 1	
4th:			
5th:			
6th:			

VEH 1 (CAR) PERFORMING U TURN TO TRAVEL E ALONG BARTONS ROAD WHEN VEH LOSES CONTROL FOR UNKNOWN REASON AND MOUNTS NORTH KERB COLLIDING WITH VEH 2 (CAR) PARKED ON DRIVEWAY OF NUMBER 7.
Occurred on BARTONS ROAD OUTSIDE NUMBER 7, HAVANT, HAMPSHIRE

Vehicle Reference 1 Car U-turn
Vehicle movement from E to E No tow / articulation Leaving the main road
On main carriageway No skidding, jack-knifing or overturning
Location at impact Not at, or within 20M of Jct First impact Front Hit vehicle:
Hit object in road None Off road: Tree
Nearside Age of Driver 54 Female
Not hit and run Breath test Not applicable
Left hand drive: No

Casualty Reference: 1 Vehicle: 1 Age: 54 Female Driver/rider Severity: Serious
Not a pupil
Seatbelt Not Applicable Cycle helmet: Not a cyclist

Vehicle Reference 2 Car Parked
Vehicle movement from Park to Parked No tow / articulation Leaving the main road
On main carriageway No skidding, jack-knifing or overturning
Location at impact Not at, or within 20M of Jct First impact Front Hit vehicle:
Hit object in road None Off road: None
Did not leave carr Age of Driver Not traced
Not hit and run Breath test Not requested
Left hand drive: No

Accidents between dates **01/07/2010** **and** **30/06/2015** (60) months

Selection:
Selected using Pre-defined Query : ; Refined using Accidents within selected Polygons -HC - RPU Statistics Request ("AW PETERSFIELD ROAD")

Notes:

150117333 08/04/2015 Time 1220 Vehicles 2 Casualties 1 Slight
E:472140 N: 108137 First Road: B 2149 Road Type Single carriageway
Speed limit: 40 Junction Detail: T & Stag Jct Automatic traffic signal Unclassified
Crossing: Control None Facilities: None within 50m Road surface Dry
Daylight Fine without high winds
Special Conditions at Site None Carriageway Hazards: None
Place accident reported: At scene DfT Special Projects:

Causation

	Factor:	Participant:	Confidence:
1st:	Careless/Reckless/In a hurry	Vehicle 2	Very Likely
2nd:	Failed to look properly	Vehicle 2	Very Likely
3rd:			
4th:			
5th:			
6th:			

VEH 2 (VAN) TRAVELLING SW ALONG B2149 PETERSFIELD ROAD, FAILS TO PAY ATTENTION TO THE ROAD AHEAD AND FAILS TO STOP IN TIME AND COLLIDES WITH THE REAR OF VEH 1 (CAR) STATIONARY AT TRAFFIC LIGHT.
Occurred on B2149 PETERSFIELD ROAD AT JUNCTION WITH BARTONS ROAD, HAVANT, HAMPSHIRE

Vehicle Reference 1 Car Going ahead but held up
Vehicle movement from NE to SW No tow / articulation Leaving the main road
On main carriageway No skidding, jack-knifing or overturning
Location at impact Jct Approach First impact Back Hit vehicle:
Hit object in road None Off road: None
Did not leave carr Age of Driver 49 Male
Not hit and run Breath test Negative
Left hand drive: No

Casualty Reference: 1 Vehicle: 1 Age: 49 Male Driver/rider Severity: Slight
Not a pupil
Seatbelt Not Applicable Cycle helmet: Not a cyclist

Vehicle Reference 2 Van or Goods 3.5 tonnes mgw and under Stopping
Vehicle movement from NE to SW No tow / articulation Leaving the main road
On main carriageway No skidding, jack-knifing or overturning
Location at impact Jct Approach First impact Front Hit vehicle:
Hit object in road None Off road: None
Did not leave carr Age of Driver 42 Male
Not hit and run Breath test Negative
Left hand drive: No

Accidents between dates **01/07/2010** **and** **30/06/2015** (60) months

Selection:
Selected using Pre-defined Query : ; Refined using Accidents within selected Polygons -HC - RPU Statistics Request ("AW PETERSFIELD ROAD")

Notes:

130195398 29/05/2013 Time 1335 Vehicles 2 Casualties 1 Slight
E:472147 N: 108114 First Road: B 2149 Road Type Single carriageway
Speed limit: 30 Junction Detail: T & Stag Jct Automatic traffic signal Unclassified
Crossing: Control None Facilities: None within 50m Road surface Wet/Damp
Daylight Raining without high winds
Special Conditions at Site None Carriageway Hazards: None
Place accident reported: Elsewhere DfT Special Projects:

Causation

	Factor:	Participant:	Confidence:
1st:	Failed to look properly	Vehicle 2	Possible
2nd:	Failed to judge other persons path or speed	Vehicle 2	Possible
3rd:			
4th:			
5th:			
6th:			

VEH 1 (CAR) TRAVELLING W ALONG BARTONS ROAD STOPPED BEHIND TRAFFIC WAITING AT THE JUNCTION WITH B2149 PETERSFIELD ROAD. VEH 2 (CAR) FAILED TO STOP IN TIME AND COLLIDED WITH THE REAR OF VEH 1.
Occurred on B2149 PETERSFIELD ROAD AT JUNCTION WITH BARTONS ROAD, HAVANT, HAMPSHIRE

Vehicle Reference 1 Car Going ahead but held up
Vehicle movement from E to W No tow / articulation Leaving the main road
On main carriageway No skidding, jack-knifing or overturning
Location at impact Jct Approach First impact Back Hit vehicle:
Hit object in road None Off road: None
Did not leave carr Age of Driver 50 Female
Not hit and run Breath test Driver not contacted
Left hand drive: No

Casualty Reference: 1 Vehicle: 1 Age: 50 Female Driver/rider Severity: Slight
Not a pupil
Seatbelt Not Applicable Cycle helmet: Not a cyclist

Vehicle Reference 2 Car Going ahead other
Vehicle movement from E to W No tow / articulation Leaving the main road
On main carriageway Skidded
Location at impact Jct Approach First impact Front Hit vehicle:
Hit object in road None Off road: None
Did not leave carr Age of Driver 18 Male
Not hit and run Breath test Driver not contacted
Left hand drive: No

Accidents between dates **01/07/2010** **and** **30/06/2015** (60) months

Selection:

Selected using Pre-defined Query : ; Refined using Accidents within selected Polygons -HC - RPU Statistics Request ("AW PETERSFIELD ROAD")

Notes:

Accidents involving:

	Fatal	Serious	Slight	Total
Motor vehicles only (excluding 2-wheels)	0	1	3	4
2-wheeled motor vehicles	0	0	0	0
Pedal cycles	0	0	1	1
Horses & other	0	0	0	0
Total	0	1	4	5

Casualties:

	Fatal	Serious	Slight	Total
Vehicle driver	0	1	3	4
Passenger	0	0	1	1
Motorcycle rider	0	0	0	0
Cyclist	0	0	1	1
Pedestrian	0	0	0	0
Other	0	0	0	0
Total	0	1	5	6

Accidents between dates **01/07/2010** **and** **30/06/2015** (60) months

Selection:
Selected using Pre-defined Query : ; Refined using Accidents within selected Polygons -HC - RPU Statistics Request ("AW BARTONS ROAD")

Notes:

110132955 31/03/2011 Time 1130 Vehicles 3 Casualties 1 Slight
E:472733 N: 108030 First Road: U Road Type Single carriageway
Speed limit: 30 Junction Detail: T & Stag Jct Give way or controlled Unclassified
Crossing: Control None Facilities: None within 50m Road surface Wet/Damp
Daylight:street lights present Fine without high winds
Special Conditions at Site None Carriageway Hazards: None
Place accident reported: At scene DfT Special Projects:

Causation

	Factor:	Participant:	Confidence:
1st:	Sudden braking	Vehicle 1	Very Likely
2nd:	Slippery road (due to weather)	Vehicle 2	Possible
3rd:	Following too close	Vehicle 2	Very Likely
4th:	Failed to look properly	Vehicle 2	Very Likely
5th:	Disobeyed Give Way or Stop sign or markings	Vehicle 3	Very Likely
6th:	Failed to look properly	Vehicle 3	Very Likely

VEH 3 (CAR) TRAVELLING NE ALONG NEW LANE, TURNS RIGHT INTO BARTONS ROAD ACROSS PATH OF VEH 1 (CAR) TRAVELLING SE ALONG BARTONS ROAD. VEH 1 FORCED TO BRAKE HARD, CAUSING FOLLOWING VEH 2 (CAR) TO HIT REAR OF VEH 1.
Occurred on BARTONS ROAD AT JUNCTION WITH NEW LANE, HAVANT, HAMPSHIRE

Vehicle Reference 1 Car Stopping
Vehicle movement from NW to SE No tow / articulation Leaving the main road
On main carriageway No skidding, jack-knifing or overturning
Location at impact Jct Approach First impact Back Hit vehicle: 2
Hit object in road None Off road: None
Did not leave carr Age of Driver 60 Female
Not hit and run Breath test Negative
Left hand drive:

Vehicle Reference 2 Car Going ahead other
Vehicle movement from NW to SE No tow / articulation Leaving the main road
On main carriageway No skidding, jack-knifing or overturning
Location at impact Jct Approach First impact Front Hit vehicle: 1
Hit object in road None Off road: None
Did not leave carr Age of Driver 28 Female
Not hit and run Breath test Negative
Left hand drive:

Casualty Reference: 1 Vehicle: 2 Age: 28 Female Driver/rider Severity: Slight
Not a pupil
Seatbelt Not Applicable Cycle helmet:

Accidents between dates **01/07/2010** **and** **30/06/2015** (60) months

Selection:

Selected using Pre-defined Query : ; Refined using Accidents within selected Polygons -HC - RPU Statistics Request ("AW BARTONS ROAD")

Notes:

Vehicle Reference 3 Car Starting
Vehicle movement from SW to NE No tow / articulation Leaving the main road
On main carriageway No skidding, jack-knifing or overturning
Location at impact Entering main road First impact Did not impact Hit vehicle:
Hit object in road None Off road: None
Did not leave carr Age of Driver Not traced
Non-stop, not hit Breath test Driver not contacted
Left hand drive:

Accidents between dates **01/07/2010** **and** **30/06/2015** (60) months

Selection:
Selected using Pre-defined Query : ; Refined using Accidents within selected Polygons -HC - RPU Statistics Request ("AW BARTONS ROAD")

Notes:

110396231 17/09/2011 Time 0920 Vehicles 2 Casualties 1 Slight
E:472799 N: 108002 First Road: U Road Type Single carriageway
Speed limit: 30 Junction Detail: T & Stag Jct Give way or controlled Unclassified
Crossing: Control None Facilities: None within 50m Road surface Wet/Damp
Daylight: no street lighting Raining without high winds
Special Conditions at Site None Carriageway Hazards: None
Place accident reported: Elsewhere DfT Special Projects:

Causation

	Factor:	Participant:	Confidence:
1st:	Travelling too fast for conditions	Vehicle 2	Very Likely
2nd:	Failed to judge other persons path or speed	Vehicle 2	Very Likely
3rd:			
4th:			
5th:			
6th:			

VEH 2 (CAR) TRAVELLING NW ALONG BARTONS ROAD FAILED TO BRAKE IN TIME AND COLLIDED WITH REAR OF VEH 1 (CAR) IN FRONT AND WAITING TO TURN RIGHT INTO WAKEFORDS WAY.
Occurred on BARTONS ROAD AT JUNCTION WITH WAKEFORDS WAY, HAVANT, HAMPSHIRE

Vehicle Reference 1 Car Waiting to turn right
Vehicle movement from SE to NW No tow / articulation Leaving the main road
On main carriageway No skidding, jack-knifing or overturning
Location at impact Mid Junction - on roundabout or r First impact Back Hit vehicle: 2
Hit object in road None Off road: None
Did not leave carr Age of Driver 62 Male
Not hit and run Breath test Driver not contacted
Left hand drive:

Casualty Reference: 1 Vehicle: 1 Age: 62 Female Passenger Severity: Slight
Not a pupil
Seatbelt Not Applicable Cycle helmet:

Front seat

Vehicle Reference 2 Car Going ahead other
Vehicle movement from SE to NW No tow / articulation Leaving the main road
On main carriageway Skidded
Location at impact Mid Junction - on roundabout or r First impact Front Hit vehicle: 1
Hit object in road None Off road: None
Did not leave carr Age of Driver 38 Female
Not hit and run Breath test Driver not contacted
Left hand drive:

Accidents between dates **01/07/2010** **and** **30/06/2015** (60) months

Selection:
Selected using Pre-defined Query : ; Refined using Accidents within selected Polygons -HC - RPU Statistics Request ("AW BARTONS ROAD")

Notes:

110428585 09/10/2011 Time 0001 Vehicles 2 Casualties 1 Slight
E:473621 N: 108075 First Road: U Road Type Single carriageway
Speed limit: 40 Junction Detail: T & Stag Jct Give way or controlled Unclassified
Crossing: Control None Facilities: None within 50m Road surface Wet/Damp
Darkness: street lights present and lit Fine without high winds
Special Conditions at Site None Carriageway Hazards: None
Place accident reported: At scene DfT Special Projects:

Causation

	Factor:	Participant:	Confidence:
1st:	Failed to judge other persons path or speed	Vehicle 1	Very Likely
2nd:	Poor turn or manoevre	Vehicle 1	Very Likely
3rd:	Failed to look properly	Vehicle 1	
4th:			
5th:			
6th:			

VEH 1 (CAR) TRAVELLING N ALONG EASTLEIGH ROAD TURNS RIGHT INTO BARTONS ROAD INTO THE PATH OF VEH 2 (TAXI) TRAVELLING W ALONG BARTONS ROAD. VEH 2 CONSEQUENTLY COLLIDED WITH OFFSIDE OF VEH 1.
Occurred on BARTONS ROAD AT JUNCTION WITH EASTLEIGH ROAD, HAVANT, HAMPSHIRE

Vehicle Reference 1 Car Turning right
Vehicle movement from S to E No tow / articulation Leaving the main road
On main carriageway No skidding, jack-knifing or overturning
Location at impact Entering main road First impact Offside Hit vehicle: 2
Hit object in road None Off road: None
Did not leave carr Age of Driver 62 Male
Not hit and run Breath test Negative
Left hand drive:

Vehicle Reference 2 Taxi/Private hire car Going ahead other
Vehicle movement from E to W No tow / articulation Leaving the main road
On main carriageway No skidding, jack-knifing or overturning
Location at impact Jct Approach First impact Front Hit vehicle: 1
Hit object in road None Off road: None
Did not leave carr Age of Driver 22 Male
Not hit and run Breath test Negative
Left hand drive:

Casualty Reference: 1 Vehicle: 2 Age: 22 Male Driver/rider Severity: Slight
Not a pupil
Seatbelt Not Applicable Cycle helmet:

Accidents between dates **01/07/2010** **and** **30/06/2015** (60) months

Selection:
Selected using Pre-defined Query : ; Refined using Accidents within selected Polygons -HC - RPU Statistics Request ("AW BARTONS ROAD")

Notes:

110435790 13/10/2011 Time 1700 Vehicles 3 Casualties 2 Slight
E:472804 N: 108001 First Road: U Road Type Single carriageway
Speed limit: 30 Junction Detail: T & Stag Jct Give way or controlled Unclassified
Crossing: Control None Facilities: None within 50m Road surface Dry
Daylight:street lights present Fine without high winds
Special Conditions at Site None Carriageway Hazards: None
Place accident reported: At scene DfT Special Projects:

Causation

	Factor:	Participant:	Confidence:
1st:	Failed to look properly	Vehicle 3	Very Likely
2nd:			
3rd:			
4th:			
5th:			
6th:			

VEH 3 (CAR) TRAVELLING NW ALONG BARTONS ROAD FAILS TO NOTICE STATIONARY TRAFFIC AHEAD AND COLLIDES INTO VEH 2 (CAR) SHUNTING IT FORWARD INTO VEH 1 (CAR) IN FRONT WAITING TO TURN RIGHT INTO WAKEFORDS WAY.
Occurred on BARTONS ROAD AT JUNCTION WITH WAKEFORDS WAY, HAVANT, HAMPSHIRE

Vehicle Reference 1 Car Waiting to turn right
Vehicle movement from SE to NW No tow / articulation Leaving the main road
On main carriageway No skidding, jack-knifing or overturning
Location at impact Mid Junction - on roundabout or r First impact Back Hit vehicle: 2
Hit object in road None Off road: None
Did not leave carr Age of Driver 59 Male
Not hit and run Breath test Negative
Left hand drive:

Vehicle Reference 2 Car Going ahead but held up
Vehicle movement from SE to NW No tow / articulation Leaving the main road
On main carriageway No skidding, jack-knifing or overturning
Location at impact Mid Junction - on roundabout or r First impact Back Hit vehicle: 3
Hit object in road None Off road: None
Did not leave carr Age of Driver 53 Female
Not hit and run Breath test Negative
Left hand drive:

Casualty Reference: 1 Vehicle: 2 Age: 53 Female Driver/rider Severity: Slight
Not a pupil
Seatbelt Not Applicable Cycle helmet:

Accidents between dates **01/07/2010** **and** **30/06/2015** (60) months

Selection:

Selected using Pre-defined Query : ; Refined using Accidents within selected Polygons -HC - RPU Statistics Request ("AW BARTONS ROAD")

Notes:

Vehicle Reference 3 Car Going ahead other
Vehicle movement from SE to NW No tow / articulation Leaving the main road
On main carriageway No skidding, jack-knifing or overturning
Location at impact Mid Junction - on roundabout or r First impact Front Hit vehicle: 2
Hit object in road None Off road: None
Did not leave carr Age of Driver 98 Male
Not hit and run Breath test Negative
Left hand drive:

Casualty Reference: 2 Vehicle: 3 Age: 98 Male Driver/rider Severity: Slight
Not a pupil
Seatbelt Not Applicable Cycle helmet:

Accidents between dates **01/07/2010** **and** **30/06/2015** (60) months

Selection:
Selected using Pre-defined Query : ; Refined using Accidents within selected Polygons -HC - RPU Statistics Request ("AW BARTONS ROAD")

Notes:

110479576 12/11/2011 Time 1210 Vehicles 2 Casualties 1 Serious
E:473735 N: 108108 First Road: B 2148 Road Type Single carriageway
Speed limit: 30 Junction Detail: T & Stag Jct Give way or controlled Unclassified
Crossing: Control None Facilities: None within 50m Road surface Dry
Daylight:street lights present Fine without high winds
Special Conditions at Site None Carriageway Hazards: None
Place accident reported: At scene DfT Special Projects:

Causation

	Factor:	Participant:	Confidence:
1st:	Failed to look properly	Vehicle 1	Very Likely
2nd:	Disobeyed Give Way or Stop sign or markings	Vehicle 1	Very Likely
3rd:			
4th:			
5th:			
6th:			

VEH 1 (CAR) TRAVELLING E ALONG BARTONS ROAD FAILED TO GIVE WAY AND TURNED RIGHT ONTO B2148 HORNDEAN ROAD INTO PATH OF VEH 2 (M/CYCLE) TRAVELLING N ALONG B2148 HORNDEAN ROAD CAUSING COLLISION.
Occurred on B2148 HORNDEAN ROAD AT JUNCTION WITH BARTONS ROAD, EMSWORTH, HAMPSHIRE

Vehicle Reference 1 Car Turning right
Vehicle movement from W to S No tow / articulation Leaving the main road
On main carriageway No skidding, jack-knifing or overturning
Location at impact Mid Junction - on roundabout or r First impact Offside Hit vehicle: 2
Hit object in road None Off road: None
Did not leave carr Age of Driver 35 Male
Not hit and run Breath test Negative
Left hand drive:

Vehicle Reference 2 Motorcycle over 500cc Going ahead other
Vehicle movement from S to N No tow / articulation Leaving the main road
On main carriageway Skidded
Location at impact Mid Junction - on roundabout or r First impact Front Hit vehicle: 1
Hit object in road None Off road: None
Did not leave carr Age of Driver 53 Male
Not hit and run Breath test Negative
Left hand drive:

Casualty Reference: 1 Vehicle: 2 Age: 53 Male Driver/rider Severity: Serious
Not a pupil
Seatbelt Not Applicable Cycle helmet:

Accidents between dates **01/07/2010** **and** **30/06/2015** (60) months

Selection:
Selected using Pre-defined Query : ; Refined using Accidents within selected Polygons -HC - RPU Statistics Request ("AW BARTONS ROAD")

Notes:

120178965 10/05/2012 Time 0935 Vehicles 2 Casualties 1 Slight
E:473747 N: 108067 First Road: B 2148 Road Type Single carriageway
Speed limit: 30 Junction Detail: T & Stag Jct Give way or controlled Unclassified
Crossing: Control None Facilities: None within 50m Road surface Wet/Damp
Daylight Raining without high winds
Special Conditions at Site None Carriageway Hazards: None
Place accident reported: At scene DfT Special Projects:

Causation

	Factor:	Participant:	Confidence:
1st:	Failed to look properly	Vehicle 1	Very Likely
2nd:			
3rd:			
4th:			
5th:			
6th:			

VEH 1 (CAR) TRAVELLING SW ALONG EMSWORTH COMMON ROAD TURNED RIGHT ONTO B2148 HORNDEAN ROAD FAILING TO SEE VEH 2 (M/CYCLE) TRAVELLING N ALONG B2148 HORNDEAN ROAD BEHIND A VAN. VEH 1 COLLIDED WITH VEH 2 KNOCKING RIDER OFF.

Occurred on B2148 HORNDEAN ROAD AT JUNCTION WITH EMSWORTH COMMON ROAD, HAVANT, HAMPSHIRE

Vehicle Reference 1 Car Turning right
Vehicle movement from NE to N No tow / articulation Leaving the main road
On main carriageway No skidding, jack-knifing or overturning
Location at impact Mid Junction - on roundabout or r First impact Front Hit vehicle:
Hit object in road None Off road: None
Did not leave carr Age of Driver 63 Male
Not hit and run Breath test Negative
Left hand drive: No

Vehicle Reference 2 Motorcycle over 500cc Going ahead other
Vehicle movement from S to N No tow / articulation Leaving the main road
On main carriageway Skidded
Location at impact Mid Junction - on roundabout or r First impact Front Hit vehicle:
Hit object in road None Off road: None
Did not leave carr Age of Driver 40 Male
Not hit and run Breath test Negative
Left hand drive: No

Casualty Reference: 1 Vehicle: 2 Age: 40 Male Driver/rider Severity: Slight
Not a pupil
Seatbelt Not Applicable Cycle helmet: Not a cyclist

Accidents between dates **01/07/2010** **and** **30/06/2015** (60) months

Selection:
Selected using Pre-defined Query : ; Refined using Accidents within selected Polygons -HC - RPU Statistics Request ("AW BARTONS ROAD")

Notes:

120195897 22/05/2012 Time 1124 Vehicles 2 Casualties 2 Slight
E:473735 N: 108107 First Road: B 2148 Road Type Single carriageway
Speed limit: 60 Junction Detail: T & Stag Jct Give way or controlled Unclassified
Crossing: Control None Facilities: Central reservation Road surface Dry
Daylight Fine without high winds
Special Conditions at Site None Carriageway Hazards: None
Place accident reported: At scene DfT Special Projects:

Causation

	Factor:	Participant:	Confidence:
1st:	Junction restart	Vehicle 2	Very Likely
2nd:	Failed to judge other persons path or speed	Vehicle 2	Very Likely
3rd:			
4th:			
5th:			
6th:			

VEH 1 (CAR) WAS TRAVELLING N ALONG B2148 HORNDEAN ROAD. VEH 2 (CAR) TRAVELLING E ALONG BARTONS ROAD TURNED INTO HORNDEAN ROAD INTO THE PATH OF VEH 1. VEH 1 COLLIDED WITH THE OFFSIDE OF VEH 2.
Occurred on B2148 HORNDEAN ROAD AT JUNCTION WITH BARTONS ROAD, HAVANT, HAMPSHIRE

Vehicle Reference 1 Car Going ahead other
Vehicle movement from S to N No tow / articulation Leaving the main road
On main carriageway No skidding, jack-knifing or overturning
Location at impact Jct Approach First impact Front Hit vehicle:
Hit object in road None Off road: None
Did not leave carr Age of Driver 42 Female
Not hit and run Breath test Negative
Left hand drive: No

Casualty Reference: 1 Vehicle: 1 Age: 42 Female Driver/rider Severity: Slight
Not a pupil
Seatbelt Not Applicable Cycle helmet: Not a cyclist

Vehicle Reference 2 Car Turning right
Vehicle movement from W to S No tow / articulation Leaving the main road
On main carriageway No skidding, jack-knifing or overturning
Location at impact Entering main road First impact Offside Hit vehicle:
Hit object in road None Off road: None
Did not leave carr Age of Driver 82 Male
Not hit and run Breath test Negative
Left hand drive: No

Casualty Reference: 2 Vehicle: 2 Age: 82 Male Driver/rider Severity: Slight
Not a pupil
Seatbelt Not Applicable Cycle helmet: Not a cyclist

Accidents between dates **01/07/2010** **and** **30/06/2015** (60) months

Selection:
Selected using Pre-defined Query : ; Refined using Accidents within selected Polygons -HC - RPU Statistics Request ("AW BARTONS ROAD")

Notes:

120195659 23/05/2012 Time 0800 Vehicles 2 Casualties 2 Slight
E:472731 N: 108030 First Road: U Road Type Single carriageway
Speed limit: 30 Junction Detail: T & Stag Jct Give way or controlled Unclassified
Crossing: Control None Facilities: None within 50m Road surface Dry
Daylight Fine without high winds
Special Conditions at Site None Carriageway Hazards: None
Place accident reported: At scene DfT Special Projects:

Causation

	Factor:	Participant:	Confidence:
1st:	Failed to judge other persons path or speed	Vehicle 2	Possible
2nd:			
3rd:			
4th:			
5th:			
6th:			

VEH 1 (CAR) TRAVELLING W ALONG BARTONS ROAD COLLIDED WITH THE OFFSIDE OF VEH 2 (VAN) WHICH TURNED RIGHT FROM NEW LANE INTO BARTONS ROAD INTO THE PATH OF VEH 1.
Occurred on BARTONS ROAD AT JUNCTION WITH NEW LANE, HAVANT, HAMPSHIRE

Vehicle Reference 1 Car Going ahead other
Vehicle movement from E to W No tow / articulation Leaving the main road
On main carriageway No skidding, jack-knifing or overturning
Location at impact Jct Approach First impact Front Hit vehicle:
Hit object in road None Off road: None
Did not leave carr Age of Driver 52 Male
Not hit and run Breath test Negative
Left hand drive: No

Vehicle Reference 2 Car Turning right
Vehicle movement from S to E No tow / articulation Leaving the main road
On main carriageway No skidding, jack-knifing or overturning
Location at impact Entering main road First impact Offside Hit vehicle:
Hit object in road None Off road: None
Did not leave carr Age of Driver 32 Female
Not hit and run Breath test Negative
Left hand drive: No

Casualty Reference: 1 Vehicle: 2 Age: 15 Female Passenger Severity: Slight
Not a pupil
Seatbelt Not Applicable Cycle helmet: Not a cyclist

Front seat

Casualty Reference: 2 Vehicle: 2 Age: 7 Male Passenger Severity: Slight
Not a pupil
Seatbelt Not Applicable Cycle helmet: Not a cyclist

Back seat

Accidents between dates **01/07/2010** **and** **30/06/2015** (60) months

Selection:
Selected using Pre-defined Query : ; Refined using Accidents within selected Polygons -HC - RPU Statistics Request ("AW BARTONS ROAD")

Notes:

120289020 26/07/2012 Time 1800 Vehicles 2 Casualties 1 Slight
E:473735 N: 108110 First Road: B 2148 Road Type Single carriageway
Speed limit: 30 Junction Detail: T & Stag Jct Give way or controlled Unclassified
Crossing: Control None Facilities: None within 50m Road surface Dry
Daylight Fine without high winds
Special Conditions at Site None Carriageway Hazards: None
Place accident reported: At scene DfT Special Projects:

Causation

	Factor:	Participant:	Confidence:
1st:	Poor turn or manoevre	Vehicle 1	Very Likely
2nd:	Road layout (eg bend, hill crest)	Vehicle 1	Very Likely
3rd:			
4th:			
5th:			
6th:			

VEH 1 (CAR) TRAVELLING E ALONG BARTONS ROAD TURNED RIGHT ONTO B2148 HORNDEAN ROAD FAILING TO SEE VEH 2 (CAR) TRAVELLING N ALONG B2148 HORNDEAN ROAD CAUSING COLLISION.
Occurred on B2148 HORNDEAN ROAD AT JUNCTION WITH BARTONS ROAD, HAVANT, HAMPSHIRE

Vehicle Reference 1 Car Turning right
Vehicle movement from W to S No tow / articulation Leaving the main road
On main carriageway No skidding, jack-knifing or overturning
Location at impact Mid Junction - on roundabout or r First impact Front Hit vehicle:
Hit object in road None Off road: None
Did not leave carr Age of Driver 76 Female
Not hit and run Breath test Negative
Left hand drive: No

Casualty Reference: 1 Vehicle: 1 Age: 76 Female Driver/rider Severity: Slight
Not a pupil
Seatbelt Not Applicable Cycle helmet: Not a cyclist

Vehicle Reference 2 Car Going ahead other
Vehicle movement from S to N No tow / articulation Leaving the main road
On main carriageway No skidding, jack-knifing or overturning
Location at impact Jct Approach First impact Nearside Hit vehicle:
Hit object in road None Off road: None
Did not leave carr Age of Driver 41 Male
Not hit and run Breath test Negative
Left hand drive: No

Accidents between dates **01/07/2010** **and** **30/06/2015** (60) months

Selection:
Selected using Pre-defined Query : ; Refined using Accidents within selected Polygons -HC - RPU Statistics Request ("AW BARTONS ROAD")

Notes:

130009754 08/01/2013 Time 0715 Vehicles 3 Casualties 1 Slight
E:473802 N: 107971 First Road: B 2148 Road Type Single carriageway
Speed limit: 60 Junction Detail: Not within 20m of junction
Crossing: Control None Facilities: None within 50m Road surface Wet/Damp
Darkness: no street lighting Fine without high winds
Special Conditions at Site None Carriageway Hazards: None
Place accident reported: At scene DfT Special Projects:

Causation

	Factor:	Participant:	Confidence:
1st:	Vehicle blind spot	Vehicle 1	Very Likely
2nd:			
3rd:			
4th:			
5th:			
6th:			

VEH 1 (CAR) TRAVELLING SE ALONG THE B2148 HORNDEAD ROAD THEN COLLIDED ON ITS FRONT WITH VEH 2 (CAR) TRAVELLING NW ALONG THE SAME ROAD, VEH 3 (VAN) THEN COLLIDED WITH SPINNING VEH 1, VEH 1 THEN LEFT THE CARRIAGEWAY TO THE NEARSIDE INTO A DITCH.
Occurred on B2148 HORNDEAN ROAD 109 METRES SE OF EMSWORTH COMMON ROAD, HAVANT, HAMPSHIRE

Vehicle Reference 1 Car Going ahead other
Vehicle movement from NW to SE No tow / articulation Leaving the main road
On main carriageway Skidded
Location at impact Not at, or within 20M of Jct First impact Front Hit vehicle:
Hit object in road None Off road: Entered ditch
Nearside Age of Driver 41 Male
Not hit and run Breath test Negative
Left hand drive: No

Vehicle Reference 2 Car Going ahead other
Vehicle movement from SE to NW No tow / articulation Leaving the main road
On main carriageway Skidded and overturned
Location at impact Not at, or within 20M of Jct First impact Front Hit vehicle:
Hit object in road None Off road: None
Did not leave carr Age of Driver 37 Male
Not hit and run Breath test Negative
Left hand drive: No

Casualty Reference: 1 Vehicle: 2 Age: 37 Male Driver/rider Severity: Slight
Not a pupil
Seatbelt Not Applicable Cycle helmet: Not a cyclist

Accidents between dates **01/07/2010** **and** **30/06/2015** (60) months

Selection: **Notes:**

Selected using Pre-defined Query : ; Refined using Accidents within selected Polygons -HC - RPU Statistics Request ("AW BARTONS ROAD")

Vehicle Reference 3 Van or Goods 3.5 tonnes mgw and under Going ahead other
Vehicle movement from SE to NW No tow / articulation Leaving the main road
On main carriageway No skidding, jack-knifing or overturning
Location at impact Not at, or within 20M of Jct First impact Back Hit vehicle:
Hit object in road None Off road: None
Did not leave carr Age of Driver 42 Male
Not hit and run Breath test Negative
Left hand drive: No

130099574 18/03/2013 Time 0029 Vehicles 1 Casualties 1 Slight
E:473737 N: 108091 First Road: B 2149 Road Type Single carriageway
Speed limit: 60 Junction Detail: T & Stag Jct Give way or controlled Unclassified
Crossing: Control None Facilities: Central reservation Road surface Wet/Damp
Darkness: street lights present and lit Fine without high winds
Special Conditions at Site None Carriageway Hazards: None
Place accident reported: At scene DfT Special Projects:

Causation

	Factor:	Participant:	Confidence:
1st:	Slippery road (due to weather)	Vehicle 1	Possible
2nd:	Exceeding speed limit	Vehicle 1	Possible
3rd:	Travelling too fast for conditions	Vehicle 1	
4th:			
5th:			
6th:			

VEH 1 (CAR) TRAVELLING N ALONG B2149 HORNDEAN ROAD WHEN VEH LOST CONTROL AND LEFT THE ROAD TO THE NEARSIDE COLLIDING WITH TREES. DRIVER DECAMPED AND LEFT THE SCENE POSSIBLY DUE TO DRINK DRIVING.
Occurred on B2149 HORNDEAN ROAD AT JUNCTION WITH BARTONS ROAD, HAVANT, HAMPSHIRE

Vehicle Reference 1 Car Going ahead other
Vehicle movement from S to N No tow / articulation Leaving the main road
On main carriageway Skidded
Location at impact Jct Approach First impact Front Hit vehicle:
Hit object in road None Off road: Lamp post
Nearside Age of Driver 22 Male
Hit and run Breath test Driver not contacted
Left hand drive: No

Casualty Reference: 1 Vehicle: 1 Age: 19 Male Passenger Severity: Slight
Not a pupil
Seatbelt Not Applicable Cycle helmet: Not a cyclist

Front seat

Accidents between dates **01/07/2010** **and** **30/06/2015** (60) months

Selection:
Selected using Pre-defined Query : ; Refined using Accidents within selected Polygons -HC - RPU Statistics Request ("AW BARTONS ROAD")

Notes:

130119784 03/04/2013 Time 1400 Vehicles 2 Casualties 1 Slight
E:473734 N: 108107 First Road: B 2149 Road Type Single carriageway
Speed limit: 60 Junction Detail: T & Stag Jct Give way or controlled Unclassified
Crossing: Control None Facilities: None within 50m Road surface Dry
Daylight Fine without high winds
Special Conditions at Site None Carriageway Hazards: None
Place accident reported: At scene DfT Special Projects:

Causation

	Factor:	Participant:	Confidence:
1st:	Failed to look properly	Vehicle 1	Very Likely
2nd:			
3rd:			
4th:			
5th:			
6th:			

VEH 1 (CAR) TRAVELLING NE ALONG BARTONS ROAD, FAILED TO LOOK PROPERLY AND TURNED RIGHT INTO B2149 HORNDEAN ROAD ACROSS THE PATH OF VEH 2 (CAR) TRAVELLING NW ON HORNDEAN ROAD AND COLLIDES.
Occurred on B2149 HORNDEAN ROAD AT JUNCTION WITH BARTONS ROAD, HAVANT, HAMPSHIRE

Vehicle Reference 1 Car Turning right
Vehicle movement from SW to SE No tow / articulation Leaving the main road
On main carriageway No skidding, jack-knifing or overturning
Location at impact Mid Junction - on roundabout or r First impact Nearside Hit vehicle:
Hit object in road None Off road: None
Did not leave carr Age of Driver 52 Female
Not hit and run Breath test Negative
Left hand drive: No

Casualty Reference: 1 Vehicle: 1 Age: 52 Female Driver/rider Severity: Slight
Not a pupil
Seatbelt Not Applicable Cycle helmet: Not a cyclist

Vehicle Reference 2 Car Going ahead other
Vehicle movement from SE to NW No tow / articulation Leaving the main road
On main carriageway No skidding, jack-knifing or overturning
Location at impact Mid Junction - on roundabout or r First impact Front Hit vehicle:
Hit object in road None Off road: None
Did not leave carr Age of Driver 26 Female
Not hit and run Breath test Not requested
Left hand drive: No

Accidents between dates **01/07/2010** **and** **30/06/2015** (60) months

Selection:
Selected using Pre-defined Query : ; Refined using Accidents within selected Polygons -HC - RPU Statistics Request ("AW BARTONS ROAD")

Notes:

130186397 23/05/2013 Time 1312 Vehicles 2 Casualties 1 Serious
E:472739 N: 108028 First Road: U Road Type Single carriageway
Speed limit: 30 Junction Detail: T & Stag Jct Give way or controlled Unclassified
Crossing: Control None Facilities: None within 50m Road surface Dry
Daylight Fine without high winds
Special Conditions at Site None Carriageway Hazards: None
Place accident reported: Elsewhere DfT Special Projects:

Causation

	Factor:	Participant:	Confidence:
1st:	Failed to look properly	Vehicle 1	Very Likely
2nd:			
3rd:			
4th:			
5th:			
6th:			

VEH 1 (CAR) TRAVELLING N ALONG NEW LANE PULLS OUT ONTO BARTONS ROAD AND COLLIDES WITH VEH 2 (P/CYCLE) TRAVELLING NW ALONG BARTONS ROAD.
Occurred on BARTONS ROAD AT JUNCTION WITH NEW LANE, HAVANT, HAMPSHIRE

Vehicle Reference 1 Car Starting
Vehicle movement from S to N No tow / articulation Leaving the main road
On main carriageway No skidding, jack-knifing or overturning
Location at impact Mid Junction - on roundabout or r First impact Front Hit vehicle:
Hit object in road None Off road: None
Did not leave carr Age of Driver 66 Male
Not hit and run Breath test Driver not contacted
Left hand drive: No

Vehicle Reference 2 Pedal Cycle Going ahead other
Vehicle movement from SE to NW No tow / articulation Leaving the main road
On main carriageway No skidding, jack-knifing or overturning
Location at impact Mid Junction - on roundabout or r First impact Front Hit vehicle:
Hit object in road None Off road: None
Did not leave carr Age of Driver 54 Female
Not hit and run Breath test Not applicable
Left hand drive: No

Casualty Reference: 1 Vehicle: 2 Age: 54 Female Driver/rider Severity: Serious
Not a pupil
Seatbelt Not Applicable Cycle helmet: Not known

Accidents between dates **01/07/2010** **and** **30/06/2015** (60) months

Selection:
Selected using Pre-defined Query : ; Refined using Accidents within selected Polygons -HC - RPU Statistics Request ("AW BARTONS ROAD")

Notes:

130235464 27/06/2013 Time 2043 Vehicles 2 Casualties 3 Slight
E:472800 N: 108005 First Road: U Road Type Single carriageway
Speed limit: 30 Junction Detail: T & Stag Jct Give way or controlled Unclassified
Crossing: Control None Facilities: None within 50m Road surface Wet/Damp
Daylight Raining without high winds
Special Conditions at Site None Carriageway Hazards: None
Place accident reported: At scene DfT Special Projects:

Causation

	Factor:	Participant:	Confidence:
1st:	Loss of control	Vehicle 1	Possible
2nd:	Failed to look properly	Vehicle 1	Possible
3rd:			
4th:			
5th:			
6th:			

VEH 1 (CAR) TRAVELLING NW ALONG BARTONS ROAD EITHER ATTEMPTS TO OVERTAKE A VEH IN FRONT OR FAILS TO SLOW FOR ONCOMING VEH 2 (CAR) AND COLLIDES WITH VEH 2.
Occurred on BARTONS ROAD AT JUNCTION WITH WAKEFORDS WAY, HAVANT, HAMPSHIRE

Vehicle Reference 1 Car Overtaking moving vehicle O/S
Vehicle movement from SE to NW No tow / articulation Leaving the main road
On main carriageway No skidding, jack-knifing or overturning
Location at impact Mid Junction - on roundabout or r First impact Front Hit vehicle:
Hit object in road None Off road: None
Did not leave carr Age of Driver 31 Male
Not hit and run Breath test Negative
Left hand drive: No

Casualty Reference: 1 Vehicle: 1 Age: 31 Male Driver/rider Severity: Slight
Not a pupil
Seatbelt Not Applicable Cycle helmet: Not a cyclist

Accidents between dates **01/07/2010** **and** **30/06/2015** (60) months

Selection:

Selected using Pre-defined Query : ; Refined using Accidents within selected Polygons -HC - RPU Statistics Request ("AW BARTONS ROAD")

Notes:

Vehicle Reference 2 Car Going ahead other
Vehicle movement from NW to SE No tow / articulation Leaving the main road
On main carriageway No skidding, jack-knifing or overturning
Location at impact Mid Junction - on roundabout or r First impact Front Hit vehicle:
Hit object in road None Off road: None
Did not leave carr Age of Driver 22 Female
Not hit and run Breath test Negative
Left hand drive: No

Casualty Reference: 2 Vehicle: 2 Age: 22 Female Driver/rider Severity: Slight
Not a pupil
Seatbelt Not Applicable Cycle helmet: Not a cyclist

Casualty Reference: 3 Vehicle: 2 Age: 19 Female Passenger Severity: Slight
Not a pupil
Seatbelt Not Applicable Cycle helmet: Not a cyclist

Front seat

Accidents between dates **01/07/2010** **and** **30/06/2015** (60) months

Selection:
Selected using Pre-defined Query : ; Refined using Accidents within selected Polygons -HC - RPU Statistics Request ("AW BARTONS ROAD")

Notes:

140065817 24/02/2014 Time 0835 Vehicles 1 Casualties 1 Serious
E:472677 N: 108062 First Road: U Road Type Single carriageway
Speed limit: 30 Junction Detail: Not within 20m of junction
Crossing: Control None Facilities: None within 50m Road surface Dry
Daylight Fine without high winds
Special Conditions at Site None Carriageway Hazards: None
Place accident reported: At scene DfT Special Projects:

Causation

	Factor:	Participant:	Confidence:
1st:	Illness or disability, mental or physical	Vehicle 1	Very Likely
2nd:			
3rd:			
4th:			
5th:			
6th:			

VEH 1 (CAR) TRAVELLING NW ALONG BARTONS ROADLEFT THE CARRIAGEWAY TO THE NEARSIDE AND COLLIDED WITH A BUS STOP.
Occurred on BARTONS ROAD 60 METRES NORTH-WEST OF NEW LANE, HAVANT, HAMPSHIRE

Vehicle Reference 1 Car Going ahead other
Vehicle movement from SE to NW No tow / articulation Leaving the main road
On main carriageway No skidding, jack-knifing or overturning
Location at impact Not at, or within 20M of Jct First impact Front Hit vehicle:
Hit object in road None Off road: Bus stop / shelter
Nearside Age of Driver 33 Female
Not hit and run Breath test Not applicable
Left hand drive: No

Casualty Reference: 1 Vehicle: 1 Age: 33 Female Driver/rider Severity: Serious
Not a pupil
Seatbelt Not Applicable Cycle helmet: Not a cyclist

Accidents between dates **01/07/2010** **and** **30/06/2015** (60) months

Selection:
Selected using Pre-defined Query : ; Refined using Accidents within selected Polygons -HC - RPU Statistics Request ("AW BARTONS ROAD")

Notes:

140096410 19/03/2014 Time 1010 Vehicles 2 Casualties 1 Slight
E:472808 N: 108004 First Road: U Road Type Single carriageway
Speed limit: 30 Junction Detail: T & Stag Jct Give way or controlled Unclassified
Crossing: Control None Facilities: None within 50m Road surface Dry
Daylight Fine without high winds
Special Conditions at Site None Carriageway Hazards: None
Place accident reported: Elsewhere DfT Special Projects:

Causation

	Factor:	Participant:	Confidence:
1st:	Failed to look properly	Vehicle 1	Very Likely
2nd:			
3rd:			
4th:			
5th:			
6th:			

VEH 1 (CAR) WAS TRAVELLING SE ALONG BARTONS ROAD WHEN VEH 2 (BUS) TRAVELLING SW ALONG WAKEFORDS WAY TURNED LEFT INTO BARTONS ROAD AND COLLIDED WITH THE REAR OF VEH 1.
Occurred on BARTONS ROAD AT JUNCTION WITH WAKEFORDS WAY, HAVANT, HAMPSHIRE

Vehicle Reference 1 Car Going ahead other
Vehicle movement from NW to SE No tow / articulation Leaving the main road
On main carriageway No skidding, jack-knifing or overturning
Location at impact Cleared junction or waiting/parke First impact Back Hit vehicle:
Hit object in road None Off road: None
Did not leave carr Age of Driver 77 Male
Not hit and run Breath test Driver not contacted
Left hand drive: No

Casualty Reference: 1 Vehicle: 1 Age: 77 Male Driver/rider Severity: Slight
Not a pupil
Seatbelt Not Applicable Cycle helmet: Not a cyclist

Vehicle Reference 2 Bus or coach Going ahead other
Vehicle movement from NE to SE No tow / articulation Leaving the main road
On main carriageway No skidding, jack-knifing or overturning
Location at impact Entering main road First impact Front Hit vehicle:
Hit object in road None Off road: None
Did not leave carr Age of Driver Not traced
Not hit and run Breath test Driver not contacted
Left hand drive: No

Accidents between dates **01/07/2010** **and** **30/06/2015** (60) months

Selection:
Selected using Pre-defined Query : ; Refined using Accidents within selected Polygons -HC - RPU Statistics Request ("AW BARTONS ROAD")

Notes:

140207539 12/06/2014 Time 1730 Vehicles 2 Casualties 2 Slight
E:473735 N: 108104 First Road: B 2149 Road Type Single carriageway
Speed limit: 60 Junction Detail: T & Stag Jct Give way or controlled Unclassified
Crossing: Control None Facilities: None within 50m Road surface Dry
Daylight Fine without high winds
Special Conditions at Site None Carriageway Hazards: None
Place accident reported: At scene DfT Special Projects:

Causation

	Factor:	Participant:	Confidence:
1st:	Failed to look properly	Vehicle 1	Very Likely
2nd:	Failed to judge other persons path or speed	Vehicle 1	Possible
3rd:			
4th:			
5th:			
6th:			

VEH 1 (CAR) TRAVELLING NE ALONG BARTONS ROAD, FAILS TO GIVE WAY AND TURNS RIGHT ONTO B2149 HORNDEAN ROAD ACROSS THE PATH OF VEH 2 (CAR) TRAVELLING NW ON HORNDEAN ROAD AND COLLIDES.
Occurred on B2149 HORNDEAN ROAD AT JUNCTION WITH BARTONS ROAD, HAVANT, HAMPSHIRE

Vehicle Reference 1 Car Turning right
Vehicle movement from SW to SE No tow / articulation Leaving the main road
On main carriageway No skidding, jack-knifing or overturning
Location at impact Mid Junction - on roundabout or r First impact Front Hit vehicle:
Hit object in road None Off road: None
Did not leave carr Age of Driver 45 Female
Not hit and run Breath test Negative
Left hand drive: No

Casualty Reference: 1 Vehicle: 1 Age: 45 Female Driver/rider Severity: Slight
Not a pupil
Seatbelt Not Applicable Cycle helmet: Not a cyclist

Casualty Reference: 2 Vehicle: 1 Age: 19 Male Passenger Severity: Slight
Not a pupil
Seatbelt Not Applicable Cycle helmet: Not a cyclist

Front seat

Vehicle Reference 2 Car Going ahead other
Vehicle movement from SE to NW No tow / articulation Leaving the main road
On main carriageway No skidding, jack-knifing or overturning
Location at impact Mid Junction - on roundabout or r First impact Nearside Hit vehicle:
Hit object in road None Off road: None
Did not leave carr Age of Driver 28 Female
Not hit and run Breath test Negative
Left hand drive: No

Accidents between dates **01/07/2010** **and** **30/06/2015** (60) months

Selection:
Selected using Pre-defined Query : ; Refined using Accidents within selected Polygons -HC - RPU Statistics Request ("AW BARTONS ROAD")

Notes:

140226812 26/06/2014 Time 1605 Vehicles 2 Casualties 1 Slight
E:472718 N: 108046 First Road: U Road Type Single carriageway
Speed limit: 30 Junction Detail: T & Stag Jct Give way or controlled Unclassified
Crossing: Control None Facilities: None within 50m Road surface Wet/Damp
Daylight Raining without high winds
Special Conditions at Site None Carriageway Hazards: Pedestrian in carriageway - not
Place accident reported: Elsewhere DfT Special Projects:

Causation

	Factor:	Participant:	Confidence:
1st:	Slippery road (due to weather)	Vehicle 2	Very Likely
2nd:	Following too close	Vehicle 2	Possible
3rd:	Sudden braking	Vehicle 1	
4th:			
5th:			
6th:			

VEH 1 (CAR) TRAVELLING SE ALONG BARTONS ROAD BRAKED TO ALLOW A PEDESTRIAN TO CROSS. VEH 2 (VAN) FAILED TO REACT IN TIME AND COLLIDED WITH THE REAR OF VEH 1.
Occurred on BARTONS ROAD AT JUNCTION WITH NEW LANE, HAVANT, HAMPSHIRE

Vehicle Reference 1 Car Stopping
Vehicle movement from NW to SE No tow / articulation Leaving the main road
On main carriageway No skidding, jack-knifing or overturning
Location at impact Jct Approach First impact Back Hit vehicle:
Hit object in road None Off road: None
Did not leave carr Age of Driver 50 Male
Not hit and run Breath test Driver not contacted
Left hand drive: No

Casualty Reference: 1 Vehicle: 1 Age: 50 Male Driver/rider Severity: Slight
Not a pupil
Seatbelt Not Applicable Cycle helmet: Not a cyclist

Vehicle Reference 2 Van or Goods 3.5 tonnes mgw and under Going ahead other
Vehicle movement from NW to SE No tow / articulation Leaving the main road
On main carriageway No skidding, jack-knifing or overturning
Location at impact Jct Approach First impact Front Hit vehicle:
Hit object in road None Off road: None
Did not leave carr Age of Driver 50 Male
Not hit and run Breath test Driver not contacted
Left hand drive: No

Accidents between dates **01/07/2010** **and** **30/06/2015** (60) months

Selection:
Selected using Pre-defined Query : ; Refined using Accidents within selected Polygons -HC - RPU Statistics Request ("AW BARTONS ROAD")

Notes:

140227194 27/06/2014 Time 0950 Vehicles 2 Casualties 1 Serious
E:472735 N: 108035 First Road: U Road Type Single carriageway
Speed limit: 30 Junction Detail: T & Stag Jct Give way or controlled Unclassified
Crossing: Control None Facilities: None within 50m Road surface Dry
Daylight Fine without high winds
Special Conditions at Site None Carriageway Hazards: None
Place accident reported: At scene DfT Special Projects:

Causation

	Factor:	Participant:	Confidence:
1st:	Failed to look properly	Vehicle 1	Very Likely
2nd:	Failed to judge other persons path or speed	Vehicle 1	Possible
3rd:			
4th:			
5th:			
6th:			

VEH 2 (P/CYCLE) TRAVELLING SE ALONG BARTONS ROAD SLOWED TO TURN RIGHT INTO NEW LANE WHEN VEH 1 (CAR) TRAELLING NE ALONG NEW LANE TURNED RIGHT ONTO BARTONS ROAD IN FRONT OF VEH 2. VEH 2 BRAKED HARD AND RIDER FELL OFF.
Occurred on BARTONS ROAD AT JUNCTION WITH NEW LANE, HAVANT, HAMPSHIRE

Vehicle Reference 1 Car Turning right
Vehicle movement from SW to SE No tow / articulation Leaving the main road
On main carriageway No skidding, jack-knifing or overturning
Location at impact Mid Junction - on roundabout or r First impact Did not impact Hit vehicle:
Hit object in road None Off road: None
Did not leave carr Age of Driver 51 Female
Not hit and run Breath test Driver not contacted
Left hand drive: No

Vehicle Reference 2 Pedal Cycle Turning right
Vehicle movement from NW to SW No tow / articulation Leaving the main road
On main carriageway No skidding, jack-knifing or overturning
Location at impact Mid Junction - on roundabout or r First impact Did not impact Hit vehicle:
Hit object in road None Off road: None
Did not leave carr Age of Driver 48 Male
Not hit and run Breath test Not applicable
Left hand drive: No

Casualty Reference: 1 Vehicle: 2 Age: 48 Male Driver/rider Severity: Serious
Not a pupil
Seatbelt Not Applicable Cycle helmet: No

Accidents between dates **01/07/2010** **and** **30/06/2015** (60) months

Selection:
Selected using Pre-defined Query : ; Refined using Accidents within selected Polygons -HC - RPU Statistics Request ("AW BARTONS ROAD")

Notes:

140230057 29/06/2014 Time 1120 Vehicles 2 Casualties 1 Slight
E:472736 N: 108031 First Road: U Road Type Single carriageway
Speed limit: 30 Junction Detail: T & Stag Jct Give way or controlled Unclassified
Crossing: Control None Facilities: None within 50m Road surface Dry
Daylight Fine without high winds
Special Conditions at Site None Carriageway Hazards: None
Place accident reported: At scene DfT Special Projects:

Causation

	Factor:	Participant:	Confidence:
1st:	Failed to look properly	Vehicle 1	Very Likely
2nd:	Poor turn or manoevre	Vehicle 1	Very Likely
3rd:	Junction restart	Vehicle 1	
4th:			
5th:			
6th:			

VEH 1 (CAR) TRAVELLING NE ALONG NEW LANE GIVES WAY TO A M/CYCLE TRAVELLING NW ALONG BARTONS ROAD AND THEN TURNS RIGHT ONTO BARTONS ROAD FAILING TO NOTICE VEH 2 (M/CYCLE) TRAVELLING NW ALONG BARTONS ROAD CAUSING COLLISION.
Occurred on NEW LANE AT JUNCTION WITH BARTONS ROAD, HAVANT, HAMPSHIRE

Vehicle Reference 1 Car Turning right
Vehicle movement from S to SE No tow / articulation Leaving the main road
On main carriageway No skidding, jack-knifing or overturning
Location at impact Mid Junction - on roundabout or r First impact Front Hit vehicle:
Hit object in road None Off road: None
Did not leave carr Age of Driver 69 Male
Not hit and run Breath test Negative
Left hand drive: No

Vehicle Reference 2 Motorcycle over 500cc Going ahead other
Vehicle movement from SE to NW No tow / articulation Leaving the main road
On main carriageway No skidding, jack-knifing or overturning
Location at impact Mid Junction - on roundabout or r First impact Nearside Hit vehicle:
Hit object in road None Off road: None
Did not leave carr Age of Driver 59 Male
Not hit and run Breath test Negative
Left hand drive: No

Casualty Reference: 1 Vehicle: 2 Age: 59 Male Driver/rider Severity: Slight
Not a pupil
Seatbelt Not Applicable Cycle helmet: Not a cyclist

Accidents between dates **01/07/2010** **and** **30/06/2015** (60) months

Selection:
Selected using Pre-defined Query : ; Refined using Accidents within selected Polygons -HC - RPU Statistics Request ("AW BARTONS ROAD")

Notes:

140351445 28/09/2014 Time 2004 Vehicles 1 Casualties 1 Slight
E:473832 N: 108108 First Road: U Road Type Single carriageway
Speed limit: 60 Junction Detail: Not within 20m of junction
Crossing: Control None Facilities: None within 50m Road surface Dry
Darkness: no street lighting Fine without high winds
Special Conditions at Site None Carriageway Hazards: None
Place accident reported: At scene DfT Special Projects:

Causation

	Factor:	Participant:	Confidence:
1st:	Careless/Reckless/In a hurry	Casualty 1	Very Likely
2nd:	Failed to look properly	Vehicle 1	Possible
3rd:			
4th:			
5th:			
6th:			

VEH 1 (CAR) TRAVELLING NE ALONG EMSWORTH COMMON ROAD CLIPPED CAS 1 (PEDESTRIAN) WITH THE NEARSIDE WING MIRROR WHO WAS WALKING NE, FACING AWAY FROM THE TRAFFIC.
Occurred on EMSWORTH COMMON ROAD OUTSIDE GRAVEL PIT COTTAGES, HAVANT, HAMPSHIRE

Vehicle Reference 1 Car Going ahead other
Vehicle movement from SW to NE No tow / articulation Leaving the main road
On main carriageway No skidding, jack-knifing or overturning
Location at impact Not at, or within 20M of Jct First impact Nearside Hit vehicle:
Hit object in road None Off road: None
Did not leave carr Age of Driver Not traced
Not hit and run Breath test Driver not contacted
Left hand drive: No

Casualty Reference: 1 Vehicle: 1 Age: 18 Female Pedestrian Severity: Slight
Not a pupil
Seatbelt Not Applicable Cycle helmet: Not a cyclist

In carr not crossing NE bound

In carr back to traffic

Accidents between dates **01/07/2010** **and** **30/06/2015** (60) months

Selection:
Selected using Pre-defined Query : ; Refined using Accidents within selected Polygons -HC - RPU Statistics Request ("AW BARTONS ROAD")

Notes:

140376679 18/10/2014 Time 2321 Vehicles 2 Casualties 1 Slight
E:473761 N: 108062 First Road: B 2158 Road Type Single carriageway
Speed limit: 30 Junction Detail: T & Stag Jct Give way or controlled Unclassified
Crossing: Control None Facilities: None within 50m Road surface Wet/Damp
Darkness: street lights present and lit Fine without high winds
Special Conditions at Site None Carriageway Hazards: None
Place accident reported: At scene DfT Special Projects:

Causation

	Factor:	Participant:	Confidence:
1st:	Failed to look properly	Vehicle 1	Very Likely
2nd:	Disobeyed Give Way or Stop sign or markings	Vehicle 1	Very Likely
3rd:			
4th:			
5th:			
6th:			

VEH 1 (CAR) TRAVELLING SW ALONG EMSWORTH COMMON ROAD FAILED TO GIVE WAY AND TURNED LEFT ONTO B2158 HORNDEAN ROAD COLLIDING WITH VEH 2 (CAR) TRAVELLING SE ALONG B2158 HORNDEAN ROAD.

Occurred on B2158 HORNDEAN ROAD AT JUNCTION WITH EMSWORTH COMMON ROAD, HAVANT, HAMPSHIRE

Vehicle Reference 1 Car Turning left
Vehicle movement from NE to SE No tow / articulation Leaving the main road
On main carriageway No skidding, jack-knifing or overturning
Location at impact Mid Junction - on roundabout or r First impact Front Hit vehicle:
Hit object in road None Off road: None
Did not leave carr Age of Driver 81 Male
Not hit and run Breath test Negative
Left hand drive: No

Casualty Reference: 1 Vehicle: 1 Age: 81 Male Driver/rider Severity: Slight
Not a pupil
Seatbelt Not Applicable Cycle helmet: Not a cyclist

Vehicle Reference 2 Car Going ahead other
Vehicle movement from NW to SE No tow / articulation Leaving the main road
On main carriageway No skidding, jack-knifing or overturning
Location at impact Mid Junction - on roundabout or r First impact Front Hit vehicle:
Hit object in road None Off road: None
Did not leave carr Age of Driver 18 Female
Not hit and run Breath test Negative
Left hand drive: No

Accidents between dates **01/07/2010** **and** **30/06/2015** (60) months

Selection:
Selected using Pre-defined Query : ; Refined using Accidents within selected Polygons -HC - RPU Statistics Request ("AW BARTONS ROAD")

Notes:

140404796 10/11/2014 Time 1600 Vehicles 2 Casualties 1 Slight
E:473619 N: 108078 First Road: U Road Type Single carriageway
Speed limit: 40 Junction Detail: T & Stag Jct Give way or controlled Unclassified
Crossing: Control None Facilities: Central reservation Road surface Wet/Damp
Daylight Fine without high winds
Special Conditions at Site None Carriageway Hazards: None
Place accident reported: At scene DfT Special Projects:

Causation

	Factor:	Participant:	Confidence:
1st:	Failed to signal/Misleading signal	Vehicle 2	Possible
2nd:	Failed to judge other persons path or speed	Vehicle 1	Possible
3rd:			
4th:			
5th:			
6th:			

VEH 1 (CAR) TRAVELLING N ALONG EASTLEIGH ROAD TURNED RIGHT ONTO BARTONS ROAD INTO PATH OF VEH 2 (CAR) TRAVELLING W ALONG BARTONS ROAD. VEH 1 STATED VEH 2 WAS INDICATING LEFT FOR EASTLEIGH ROAD.
Occurred on BARTONS ROAD AAT JUNCTION WITH EASTLEIGH ROAD, HAVANT, HAMPSHIRE

Vehicle Reference 1 Car Turning right
Vehicle movement from S to NE No tow / articulation Leaving the main road
On main carriageway No skidding, jack-knifing or overturning
Location at impact Mid Junction - on roundabout or r First impact Offside Hit vehicle:
Hit object in road None Off road: None
Did not leave carr Age of Driver 58 Female
Not hit and run Breath test Negative
Left hand drive: No

Casualty Reference: 1 Vehicle: 1 Age: 58 Female Driver/rider Severity: Slight
Not a pupil
Seatbelt Not Applicable Cycle helmet: Not a cyclist

Vehicle Reference 2 Car Going ahead other
Vehicle movement from NE to SW No tow / articulation Leaving the main road
On main carriageway No skidding, jack-knifing or overturning
Location at impact Mid Junction - on roundabout or r First impact Front Hit vehicle:
Hit object in road None Off road: None
Did not leave carr Age of Driver 55 Male
Not hit and run Breath test Negative
Left hand drive: No

Accidents between dates **01/07/2010** **and** **30/06/2015** (60) months

Selection:
Selected using Pre-defined Query : ; Refined using Accidents within selected Polygons -HC - RPU Statistics Request ("AW BARTONS ROAD")

Notes:

150019891 19/01/2015 Time 0750 Vehicles 2 Casualties 1 Slight
E:473760 N: 108064 First Road: B 2148 Road Type Single carriageway
Speed limit: 60 Junction Detail: T & Stag Jct Give way or controlled Unclassified
Crossing: Control None Facilities: None within 50m Road surface Dry
Darkness: street lights present and lit Fine without high winds
Special Conditions at Site None Carriageway Hazards: None
Place accident reported: At scene DfT Special Projects:

Causation

	Factor:	Participant:	Confidence:
1st:	Failed to look properly	Vehicle 1	Very Likely
2nd:			
3rd:			
4th:			
5th:			
6th:			

VEH 1 (CAR) TRAV W EMSWORTH COMMON ROAD TURNED RIGHT INTO B2148 HORNDEAN ROAD AND COLLIDED WITH THE NEARSIDE OF VEH 2 (CAR) TRAV S HORNDEAN ROAD, CAUSING VEH 2 TO LEAVE THE CARRIAGEWAY TO THE NEARSIDE AND HIT A LAMP POST.

Occurred on B2148 HORNDEAN ROAD AT JUNCTION WITH EMSWORTH COMMON ROAD, EMSWORTH, HAMPSHIRE

Vehicle Reference 1 Car Turning right
Vehicle movement from E to N No tow / articulation Leaving the main road
On main carriageway No skidding, jack-knifing or overturning
Location at impact Mid Junction - on roundabout or r First impact Front Hit vehicle:
Hit object in road None Off road: None
Did not leave carr Age of Driver 48 Female
Not hit and run Breath test Negative
Left hand drive: No

Vehicle Reference 2 Car Going ahead other
Vehicle movement from N to S No tow / articulation Leaving the main road
On main carriageway Overturned
Location at impact Mid Junction - on roundabout or r First impact Nearside Hit vehicle:
Hit object in road None Off road: Lamp post
Nearside Age of Driver 20 Male
Not hit and run Breath test Negative
Left hand drive: No

Casualty Reference: 1 Vehicle: 2 Age: 20 Male Driver/rider Severity: Slight
Not a pupil
Seatbelt Not Applicable Cycle helmet: Not a cyclist

Accidents between dates **01/07/2010** **and** **30/06/2015** (60) months

Selection:
Selected using Pre-defined Query : ; Refined using Accidents within selected Polygons -HC - RPU Statistics Request ("AW BARTONS ROAD")

Notes:

150190780 06/06/2015 Time 1045 Vehicles 2 Casualties 2 Slight
E:472738 N: 108033 First Road: U Road Type Single carriageway
Speed limit: 30 Junction Detail: T & Stag Jct Give way or controlled Unclassified
Crossing: Control None Facilities: None within 50m Road surface Dry
Daylight Fine without high winds
Special Conditions at Site None Carriageway Hazards: None
Place accident reported: At scene DfT Special Projects:

Causation

	Factor:	Participant:	Confidence:
1st:	Failed to look properly	Vehicle 1	Very Likely
2nd:	Careless/Reckless/In a hurry	Vehicle 1	Very Likely
3rd:			
4th:			
5th:			
6th:			

VEH 1 (CAR) TRAVELLING SE ALONG BARTONS ROAD, FAILS TO NOTICE AND COLLIDES WITH THE REAR OF VEH 2 (CAR) STATIONARY AT JUNCTION WAITING TO TURN RIGHT ONTO NEW LANE, CAUSING VEH 2 TO SPIN AND COME TO REST ON THE OPPOSITE SIDE OF THE ROAD.
Occurred on NEW LANE AT JUNCTION WITH BARTONS ROAD, HAVANT, HAMPSHIRE

Vehicle Reference 1 Car Going ahead other
Vehicle movement from NW to SE No tow / articulation Leaving the main road
On main carriageway No skidding, jack-knifing or overturning
Location at impact Mid Junction - on roundabout or r First impact Front Hit vehicle:
Hit object in road None Off road: None
Did not leave carr Age of Driver 43 Male
Not hit and run Breath test Negative
Left hand drive: No

Vehicle Reference 2 Car Waiting to turn right
Vehicle movement from NW to SW No tow / articulation Leaving the main road
On main carriageway No skidding, jack-knifing or overturning
Location at impact Mid Junction - on roundabout or r First impact Back Hit vehicle:
Hit object in road None Off road: None
Did not leave carr Age of Driver 26 Female
Not hit and run Breath test Not applicable
Left hand drive: No

Casualty Reference: 1 Vehicle: 2 Age: 26 Female Driver/rider Severity: Slight
Not a pupil
Seatbelt Not Applicable Cycle helmet: Not a cyclist

Casualty Reference: 2 Vehicle: 2 Age: 26 Male Passenger Severity: Slight
Not a pupil
Seatbelt Not Applicable Cycle helmet: Not a cyclist

Front seat

Accidents between dates **01/07/2010** **and** **30/06/2015** (60) months

Selection:
Selected using Pre-defined Query : ; Refined using Accidents within selected Polygons -HC - RPU Statistics Request ("AW BARTONS ROAD")

Notes:

100444727 20/10/2010 Time 0824 Vehicles 2 Casualties 2 Slight
E:473623 N: 108080 First Road: U Road Type Single carriageway
Speed limit: 40 Junction Detail: T & Stag Jct Give way or controlled Unclassified
Crossing: Control None Facilities: Central reservation Road surface Wet/Damp
Daylight:street lights present Fine without high winds
Special Conditions at Site None Carriageway Hazards: None
Place accident reported: At scene DfT Special Projects:

Causation

	Factor:	Participant:	Confidence:
1st:	Disobeyed Give Way or Stop sign or markings	Vehicle 2	Very Likely
2nd:	Failed to look properly	Vehicle 2	Very Likely
3rd:	Distraction in vehicle	Vehicle 2	
4th:			
5th:			
6th:			

VEH 2 (CAR) TRAVELLING N ALONG EASTLEIGH ROAD TURNS RIGHT INTO BARTONS ROAD FAILING TO GIVE WAY TO VEH 1 (CAR) TRAVELLING SW ALONG BARTONS ROAD AND COLLIDES.
Occurred on BARTONS ROAD AT JUNCTION WITH EASTLEIGH ROAD, EMSWORTH, HAMSPHIRE

Vehicle Reference 1 Car Going ahead other
Vehicle movement from NE to SW No tow / articulation Leaving the main road
On main carriageway No skidding, jack-knifing or overturning
Location at impact Mid Junction - on roundabout or r First impact Front Hit vehicle: 2
Hit object in road None Off road: None
Did not leave carr Age of Driver 18 Male
Not hit and run Breath test Negative
Left hand drive:

Casualty Reference: 1 Vehicle: 1 Age: 18 Male Driver/rider Severity: Slight
Not a pupil
Seatbelt Not Applicable Cycle helmet:

Vehicle Reference 2 Car Turning right
Vehicle movement from S to NE No tow / articulation Leaving the main road
On main carriageway No skidding, jack-knifing or overturning
Location at impact Mid Junction - on roundabout or r First impact Offside Hit vehicle: 1
Hit object in road None Off road: None
Did not leave carr Age of Driver 32 Female
Not hit and run Breath test Negative
Left hand drive:

Casualty Reference: 2 Vehicle: 2 Age: 32 Female Driver/rider Severity: Slight
Not a pupil
Seatbelt Not Applicable Cycle helmet:

Accidents between dates **01/07/2010** **and** **30/06/2015** (60) months

Selection:

Selected using Pre-defined Query : ; Refined using Accidents within selected Polygons -HC - RPU Statistics Request ("AW BARTONS ROAD")

Notes:

Accidents involving:

	Fatal	Serious	Slight	Total
Motor vehicles only (excluding 2-wheels)	0	1	20	21
2-wheeled motor vehicles	0	1	2	3
Pedal cycles	0	2	0	2
Horses & other	0	0	0	0
Total	0	4	22	26

Casualties:

	Fatal	Serious	Slight	Total
Vehicle driver	0	1	20	21
Passenger	0	0	7	7
Motorcycle rider	0	1	2	3
Cyclist	0	2	0	2
Pedestrian	0	0	1	1
Other	0	0	0	0
Total	0	4	30	34

APPENDIX C

JAPONICA WAY
AZALEA CLOSE
FUCHSIA CLOSE
El Sub Sta
The Lodge
Little Bishops
East Lodge House
BURY ROAD
Long Meadow
Hermitage House
Lodge Hurst Cottage
Stone Lodge Cottage
Old Station House
The Station House
0 10 20 30 40 50m

APPENDIX D

Calculation Reference: AUDIT-657801-150907-0903

TRIP RATE CALCULATION SELECTION PARAMETERS:

Land Use : 03 - RESIDENTIAL
Category : A - HOUSES PRIVATELY OWNED

VEHICLES

Selected regions and areas:

02	**SOUTH EAST**		
	ES	EAST SUSSEX	1 days
	EX	ESSEX	1 days
	SC	SURREY	1 days
	WS	WEST SUSSEX	1 days
03	**SOUTH WEST**		
	CW	CORNWALL	1 days
	DC	DORSET	2 days
04	**EAST ANGLIA**		
	CA	CAMBRIDGESHIRE	1 days
	NF	NORFOLK	2 days
	SF	SUFFOLK	3 days
05	**EAST MIDLANDS**		
	LN	LINCOLNSHIRE	3 days
06	**WEST MIDLANDS**		
	SH	SHROPSHIRE	1 days
	ST	STAFFORDSHIRE	1 days
	WM	WEST MIDLANDS	1 days
07	**YORKSHIRE & NORTH LINCOLNSHIRE**		
	NE	NORTH EAST LINCOLNSHIRE	1 days
	NY	NORTH YORKSHIRE	6 days
	SY	SOUTH YORKSHIRE	1 days
08	**NORTH WEST**		
	CH	CHESHIRE	3 days
	GM	GREATER MANCHESTER	1 days
	MS	MERSEYSIDE	1 days
09	**NORTH**		
	CB	CUMBRIA	2 days
	TW	TYNE & WEAR	1 days
10	**WALES**		
	CF	CARDIFF	2 days

This section displays the number of survey days per TRICS® sub-region in the selected set

Filtering Stage 2 selection:

This data displays the chosen trip rate parameter and its selected range. Only sites that fall within the parameter range are included in the trip rate calculation.

Parameter:	Number of dwellings
Actual Range:	7 to 432 (units:)
Range Selected by User:	30 to 500 (units:)

Public Transport Provision:
Selection by: Include all surveys

Date Range: 01/01/07 to 11/12/14

This data displays the range of survey dates selected. Only surveys that were conducted within this date range are included in the trip rate calculation.

Selected survey days:

Monday	9 days
Tuesday	12 days
Wednesday	6 days
Thursday	5 days
Friday	5 days

This data displays the number of selected surveys by day of the week.

Selected survey types:

Manual count	37 days
Directional ATC Count	0 days

This data displays the number of manual classified surveys and the number of unclassified ATC surveys, the total adding up to the overall number of surveys in the selected set. Manual surveys are undertaken using staff, whilst ATC surveys are undertaking using machines.

Selected Locations:

Suburban Area (PPS6 Out of Centre)	19
Edge of Town	18

This data displays the number of surveys per main location category within the selected set. The main location categories consist of Free Standing, Edge of Town, Suburban Area, Neighbourhood Centre, Edge of Town Centre, Town Centre and Not Known.

Selected Location Sub Categories:

Residential Zone	32
No Sub Category	5

This data displays the number of surveys per location sub-category within the selected set. The location sub-categories consist of Commercial Zone, Industrial Zone, Development Zone, Residential Zone, Retail Zone, Built-Up Zone, Village, Out of Town, High Street and No Sub Category.

LIST OF SITES relevant to selection parameters

1 **CA-03-A-04** **DETACHED** **CAMBRIDGESHIRE**

THORPE PARK ROAD
PETERBOROUGH
Suburban Area (PPS6 Out of Centre)
Residential Zone
Total Number of dwellings: 9
Survey date: TUESDAY *18/10/11* *Survey Type: MANUAL*

2 **CB-03-A-03** **SEMI DETACHED** **CUMBRIA**
HAWKSHEAD AVENUE

WORKINGTON
Edge of Town
Residential Zone
Total Number of dwellings: 40
Survey date: THURSDAY *20/11/08* *Survey Type: MANUAL*

3 **CB-03-A-04** **SEMI DETACHED** **CUMBRIA**
MOORCLOSE ROAD
SALTERBACK
WORKINGTON
Edge of Town
No Sub Category
Total Number of dwellings: 82
Survey date: FRIDAY *24/04/09* *Survey Type: MANUAL*

4 **CF-03-A-02** **MIXED HOUSES** **CARDIFF**
DROPE ROAD

CARDIFF
Edge of Town
Residential Zone
Total Number of dwellings: 196
Survey date: FRIDAY *05/10/07* *Survey Type: MANUAL*

5 **CF-03-A-03** **DETACHED** **CARDIFF**
LLANTRISANT ROAD

CARDIFF
Suburban Area (PPS6 Out of Centre)
Residential Zone
Total Number of dwellings: 29
Survey date: MONDAY *08/10/07* *Survey Type: MANUAL*

6 **CH-03-A-02** **HOUSES/FLATS** **CHESHIRE**
SYDNEY ROAD

CREWE
Edge of Town
Residential Zone
Total Number of dwellings: 174
Survey date: TUESDAY *14/10/08* *Survey Type: MANUAL*

7 **CH-03-A-05** **DETACHED** **CHESHIRE**
SYDNEY ROAD
SYDNEY
CREWE
Edge of Town
Residential Zone
Total Number of dwellings: 17
Survey date: TUESDAY *14/10/08* *Survey Type: MANUAL*

LIST OF SITES relevant to selection parameters (Cont.)

8 CH-03-A-08 DETACHED CHESHIRE
WHITCHURCH ROAD
BOUGHTON HEATH
CHESTER
Suburban Area (PPS6 Out of Centre)
Residential Zone
Total Number of dwellings: 11
Survey date: TUESDAY 22/05/12 Survey Type: MANUAL

9 CW-03-A-02 SEMI D./DETATCHED CORNWALL
BOSVEAN GARDENS

TRURO
Suburban Area (PPS6 Out of Centre)
Residential Zone
Total Number of dwellings: 73
Survey date: TUESDAY 18/09/07 Survey Type: MANUAL

10 DC-03-A-01 DETACHED DORSET
ISAACS CLOSE

POOLE
Suburban Area (PPS6 Out of Centre)
Residential Zone
Total Number of dwellings: 51
Survey date: WEDNESDAY 16/07/08 Survey Type: MANUAL

11 DC-03-A-08 BUNGALOWS DORSET
HURSTDENE ROAD
CASTLE LANE WEST
BOURNEMOUTH
Edge of Town
Residential Zone
Total Number of dwellings: 28
Survey date: MONDAY 24/03/14 Survey Type: MANUAL

12 ES-03-A-02 PRIVATE HOUSING EAST SUSSEX
SOUTH COAST ROAD

PEACEHAVEN
Edge of Town
Residential Zone
Total Number of dwellings: 37
Survey date: FRIDAY 18/11/11 Survey Type: MANUAL

13 EX-03-A-01 SEMI-DET. ESSEX
MILTON ROAD
CORRINGHAM
STANFORD-LE-HOPE
Edge of Town
Residential Zone
Total Number of dwellings: 237
Survey date: TUESDAY 13/05/08 Survey Type: MANUAL

14 GM-03-A-10 DETACHED/SEMI GREATER MANCHESTER
BUTT HILL DRIVE
PRESTWICH
MANCHESTER
Edge of Town
Residential Zone
Total Number of dwellings: 29
Survey date: WEDNESDAY 12/10/11 Survey Type: MANUAL

LIST OF SITES relevant to selection parameters (Cont.)

15 LN-03-A-01 MIXED HOUSES LINCOLNSHIRE
BRANT ROAD
BRACEBRIDGE
LINCOLN
Edge of Town
Residential Zone
Total Number of dwellings: 150
Survey date: TUESDAY 15/05/07 Survey Type: MANUAL

16 LN-03-A-02 MIXED HOUSES LINCOLNSHIRE
HYKEHAM ROAD

LINCOLN
Suburban Area (PPS6 Out of Centre)
Residential Zone
Total Number of dwellings: 186
Survey date: MONDAY 14/05/07 Survey Type: MANUAL

17 LN-03-A-03 SEMI DETACHED LINCOLNSHIRE
ROOKERY LANE
BOULTHAM
LINCOLN
Suburban Area (PPS6 Out of Centre)
Residential Zone
Total Number of dwellings: 22
Survey date: TUESDAY 18/09/12 Survey Type: MANUAL

18 MS-03-A-03 DETACHED MERSEYSIDE
BEMPTON ROAD
OTTERSPOOL
LIVERPOOL
Suburban Area (PPS6 Out of Centre)
Residential Zone
Total Number of dwellings: 15
Survey date: FRIDAY 21/06/13 Survey Type: MANUAL

19 NE-03-A-02 SEMI DETACHED & DETACHED NORTH EAST LINCOLNSHIRE
HANOVER WALK

SCUNTHORPE
Edge of Town
No Sub Category
Total Number of dwellings: 432
Survey date: MONDAY 12/05/14 Survey Type: MANUAL

20 NF-03-A-01 SEMI DET. & BUNGALOWS NORFOLK
YARMOUTH ROAD

CAISTER-ON-SEA
Suburban Area (PPS6 Out of Centre)
Residential Zone
Total Number of dwellings: 27
Survey date: TUESDAY 16/10/12 Survey Type: MANUAL

21 NF-03-A-02 HOUSES & FLATS NORFOLK
DEREHAM ROAD

NORWICH
Suburban Area (PPS6 Out of Centre)
Residential Zone
Total Number of dwellings: 98
Survey date: MONDAY 22/10/12 Survey Type: MANUAL

LIST OF SITES relevant to selection parameters (Cont.)

22 NY-03-A-06 BUNGALOWS & SEMI DET. NORTH YORKSHIRE
HORSEFAIR

BOROUGHBRIDGE
Suburban Area (PPS6 Out of Centre)
Residential Zone
Total Number of dwellings: 115
Survey date: FRIDAY 14/10/11 Survey Type: MANUAL

23 NY-03-A-07 DETACHED & SEMI DET. NORTH YORKSHIRE
CRAVEN WAY

BOROUGHBRIDGE
Edge of Town
No Sub Category
Total Number of dwellings: 23
Survey date: TUESDAY 18/10/11 Survey Type: MANUAL

24 NY-03-A-08 TERRACED HOUSES NORTH YORKSHIRE
NICHOLAS STREET

YORK
Suburban Area (PPS6 Out of Centre)
Residential Zone
Total Number of dwellings: 21
Survey date: MONDAY 16/09/13 Survey Type: MANUAL

25 NY-03-A-09 MIXED HOUSING NORTH YORKSHIRE
GRAMMAR SCHOOL LANE

NORTHALLERTON
Suburban Area (PPS6 Out of Centre)
Residential Zone
Total Number of dwellings: 52
Survey date: MONDAY 16/09/13 Survey Type: MANUAL

26 NY-03-A-10 HOUSES AND FLATS NORTH YORKSHIRE
BOROUGHBRIDGE ROAD

RIPON
Edge of Town
No Sub Category
Total Number of dwellings: 71
Survey date: TUESDAY 17/09/13 Survey Type: MANUAL

27 NY-03-A-11 PRIVATE HOUSING NORTH YORKSHIRE
HORSEFAIR

BOROUGHBRIDGE
Edge of Town
Residential Zone
Total Number of dwellings: 23
Survey date: WEDNESDAY 18/09/13 Survey Type: MANUAL

28 SC-03-A-04 DETACHED & TERRACED SURREY
HIGH ROAD

BYFLEET
Edge of Town
Residential Zone
Total Number of dwellings: 71
Survey date: THURSDAY 23/01/14 Survey Type: MANUAL

LIST OF SITES relevant to selection parameters (Cont.)

29 SF-03-A-01 SEMI DETACHED SUFFOLK
A1156 FELIXSTOWE ROAD
RACECOURSE
IPSWICH
Suburban Area (PPS6 Out of Centre)
Residential Zone
Total Number of dwellings: 77
Survey date: WEDNESDAY 23/05/07 Survey Type: MANUAL

30 SF-03-A-02 SEMI DET./TERRACED SUFFOLK
STOKE PARK DRIVE
MAIDENHALL

IPSWICH
Edge of Town
Residential Zone
Total Number of dwellings: 230
Survey date: THURSDAY 24/05/07 Survey Type: MANUAL

31 SF-03-A-04 DETACHED & BUNGALOWS SUFFOLK
NORMANSTON DRIVE

LOWESTOFT
Suburban Area (PPS6 Out of Centre)
Residential Zone
Total Number of dwellings: 7
Survey date: TUESDAY 23/10/12 Survey Type: MANUAL

32 SH-03-A-04 TERRACED SHROPSHIRE
ST MICHAEL'S STREET

SHREWSBURY
Suburban Area (PPS6 Out of Centre)
No Sub Category
Total Number of dwellings: 108
Survey date: THURSDAY 11/06/09 Survey Type: MANUAL

33 ST-03-A-05 TERRACED & DETACHED STAFFORDSHIRE
WATERMEET GROVE
ETRURIA
STOKE-ON-TRENT
Suburban Area (PPS6 Out of Centre)
Residential Zone
Total Number of dwellings: 14
Survey date: WEDNESDAY 26/11/08 Survey Type: MANUAL

34 SY-03-A-01 SEMI DETACHED HOUSES SOUTH YORKSHIRE
A19 BENTLEY ROAD
BENTLEY RISE
DONCASTER
Suburban Area (PPS6 Out of Centre)
Residential Zone
Total Number of dwellings: 54
Survey date: WEDNESDAY 18/09/13 Survey Type: MANUAL

35 TW-03-A-02 SEMI-DETACHED TYNE & WEAR
WEST PARK ROAD

GATESHEAD
Suburban Area (PPS6 Out of Centre)
Residential Zone
Total Number of dwellings: 16
Survey date: MONDAY 07/10/13 Survey Type: MANUAL

LIST OF SITES relevant to selection parameters (Cont.)

36 WM-03-A-03 MIXED HOUSING WEST MIDLANDS
BASELEY WAY
ROWLEYS GREEN
COVENTRY
Edge of Town
Residential Zone
Total Number of dwellings: 84
Survey date: MONDAY 24/09/07 Survey Type: MANUAL

37 WS-03-A-04 MIXED HOUSES WEST SUSSEX
HILLS FARM LANE
BROADBRIDGE HEATH
HORSHAM
Edge of Town
Residential Zone
Total Number of dwellings: 151
Survey date: THURSDAY 11/12/14 Survey Type: MANUAL

This section provides a list of all survey sites and days in the selected set. For each individual survey site, it displays a unique site reference code and site address, the selected trip rate calculation parameter and its value, the day of the week and date of each survey, and whether the survey was a manual classified count or an ATC count.

MANUALLY DESELECTED SITES

Site Ref	Reason for Deselection
CH-03-A-06	Proximity to Rail
SH-03-A-03	Size
SH-03-A-05	Out of Town
SH-03-A-06	No Data
WK-03-A-01	No Data
WK-03-A-02	No Data

TRIP RATE for Land Use 03 - RESIDENTIAL/A - HOUSES PRIVATELY OWNED

VEHICLES

Calculation factor: 1 DWELLS

BOLD print indicates peak (busiest) period

Time Range	ARRIVALS			DEPARTURES			TOTALS		
	No. Days	Ave. DWELLS	Trip Rate	No. Days	Ave. DWELLS	Trip Rate	No. Days	Ave. DWELLS	Trip Rate
00:00 - 01:00									
01:00 - 02:00									
02:00 - 03:00									
03:00 - 04:00									
04:00 - 05:00									
05:00 - 06:00									
06:00 - 07:00									
07:00 - 08:00	37	83	0.075	37	83	0.287	37	83	0.362
08:00 - 09:00	37	83	0.147	**37**	**83**	**0.410**	37	83	0.557
09:00 - 10:00	37	83	0.152	37	83	0.190	37	83	0.342
10:00 - 11:00	37	83	0.139	37	83	0.175	37	83	0.314
11:00 - 12:00	37	83	0.162	37	83	0.161	37	83	0.323
12:00 - 13:00	37	83	0.187	37	83	0.165	37	83	0.352
13:00 - 14:00	37	83	0.167	37	83	0.158	37	83	0.325
14:00 - 15:00	37	83	0.176	37	83	0.195	37	83	0.371
15:00 - 16:00	37	83	0.287	37	83	0.199	37	83	0.486
16:00 - 17:00	37	83	0.310	37	83	0.190	37	83	0.500
17:00 - 18:00	**37**	**83**	**0.369**	37	83	0.208	**37**	**83**	**0.577**
18:00 - 19:00	37	83	0.262	37	83	0.192	37	83	0.454
19:00 - 20:00									
20:00 - 21:00									
21:00 - 22:00									
22:00 - 23:00									
23:00 - 24:00									
Total Rates:			2.433			2.530			4.963

This section displays the trip rate results based on the selected set of surveys and the selected count type (shown just above the table). It is split by three main columns, representing arrivals trips, departures trips, and total trips (arrivals plus departures). Within each of these main columns are three sub-columns. These display the number of survey days where count data is included (per time period), the average value of the selected trip rate calculation parameter (per time period), and the trip rate result (per time period). Total trip rates (the sum of the column) are also displayed at the foot of the table.

*To obtain a trip rate, the average (mean) trip rate parameter value (TRP) is first calculated for all selected survey days that have count data available for the stated time period. The average (mean) number of arrivals, departures or totals (whichever applies) is also calculated (COUNT) for all selected survey days that have count data available for the stated time period. Then, the average count is divided by the average trip rate parameter value, and multiplied by the stated calculation factor (shown just above the table and abbreviated here as FACT). So, the method is: COUNT/TRP*FACT. Trip rates are then rounded to 3 decimal places.*

Parameter summary

Trip rate parameter range selected:	7 - 432 (units:)
Survey date date range:	01/01/07 - 11/12/14
Number of weekdays (Monday-Friday):	37
Number of Saturdays:	0
Number of Sundays:	0
Surveys manually removed from selection:	8

This section displays a quick summary of some of the data filtering selections made by the TRICS© user. The trip rate calculation parameter range of all selected surveys is displayed first, followed by the range of minimum and maximum survey dates selected by the user. Then, the total number of selected weekdays and weekend days in the selected set of surveys are show. Finally, the number of survey days that have been manually removed from the selected set outside of the standard filtering procedure are displayed.

APPENDIX F

advanced transport research

Job Number & Name: 8551 Barton Road, Havant

Site Number/Name: Site 3 - Barton Road/Eastleigh Road

Client: C & A Consulting Engineers

Date: 11/06/2015

Weather:

Comments:

Advanced Transport Research	*Job Number & Name:*	**8551 Barton Road, Havant**
Site 3 - Barton Road/Eastleigh Road	*Client:*	**C & A Consulting Engineers**
Site Plan	*Date:*	**Thursday 11 Jun 2015**

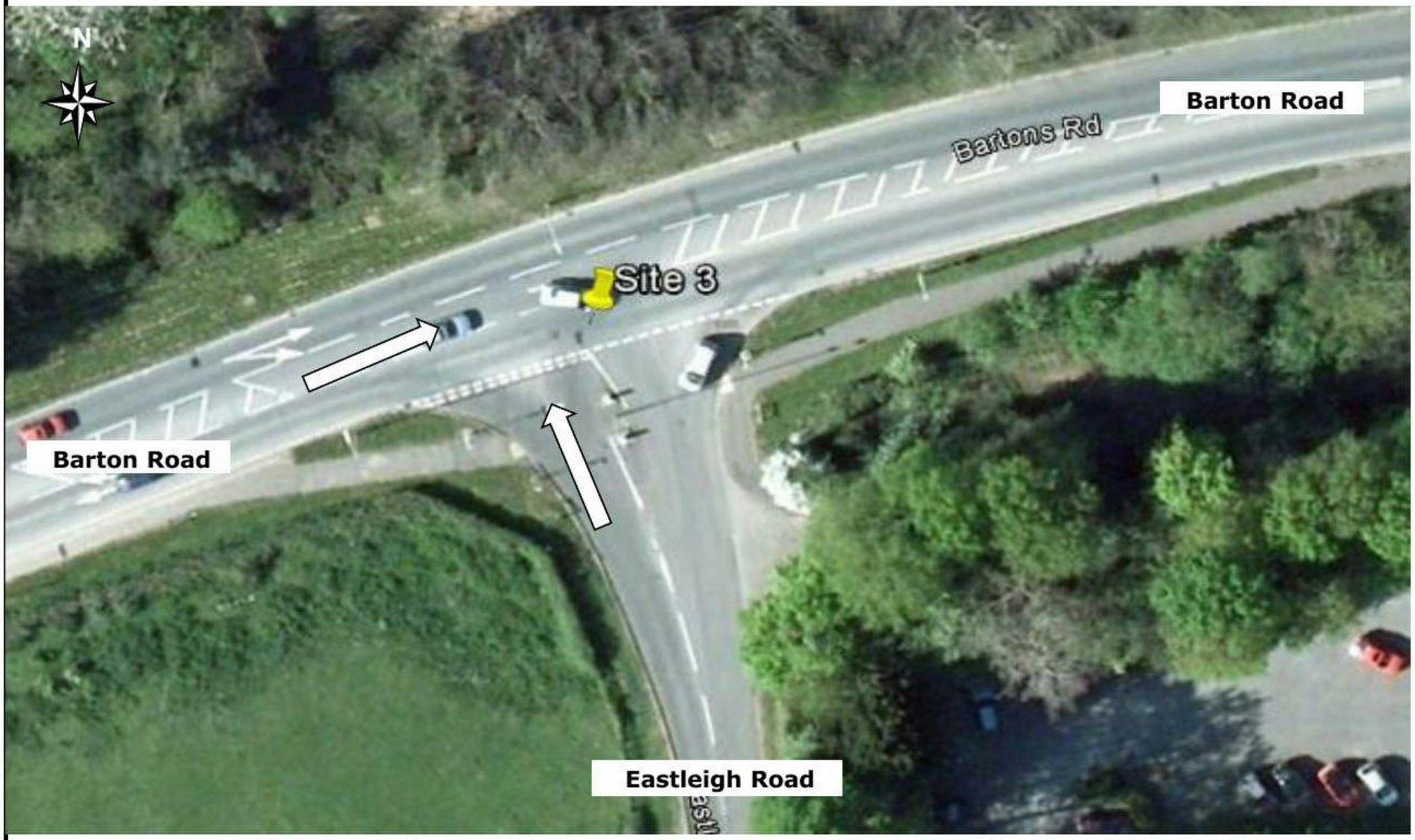

Advanced Transport Research	Job Number & Name:	8551 Barton Road, Havant
Site 3 - Barton Road/Eastleigh Road	Client:	C & A Consulting Engineers
Queue Lengths	Date:	Thursday 11 June 2015

	Barton Road Right Turn		Eastleigh Road	
Times	Lane 1	Lane 2	Lane 1	Lane 2
07:00 - 07:05	0	1	0	3
07:05 - 07:10	0	0	1	1
07:10 - 07:15	0	0	1	1
07:15 - 07:20	0	0	0	0
07:20 - 07:25	0	0	0	1
07:25 - 07:30	0	0	1	2
07:30 - 07:35	0	0	2	1
07:35 - 07:40	0	0	0	1
07:40 - 07:45	0	1	0	3
07:45 - 07:50	0	0	3	2
07:50 - 07:55	0	0	2	1
07:55 - 08:00	0	0	1	3
08:00 - 08:05	0	2	1	0
08:05 - 08:10	0	0	5	1
08:10 - 08:15	0	0	1	1
08:15 - 08:20	0	1	3	2
08:20 - 08:25	0	0	4	1
08:25 - 08:30	0	1	5	1
08:30 - 08:35	0	2	2	1
08:35 - 08:40	0	1	1	4
08:40 - 08:45	0	1	4	1
08:45 - 08:50	0	1	2	2
08:50 - 08:55	0	0	2	1
08:55 - 09:00	0	3	2	3
09:00 - 09:05	0	1	1	1
09:05 - 09:10	0	1	2	1
09:10 - 09:15	0	0	0	1
09:15 - 09:20	0	1	0	1
09:20 - 09:25	0	1	0	1
09:25 - 09:30	0	0	0	5
09:30 - 09:35	0	0	0	0
09:35 - 09:40	0	2	2	1
09:40 - 09:45	0	1	3	1
09:45 - 09:50	0	0	0	0
09:50 - 09:55	0	0	2	3
09:55 - 10:00	0	0	1	0

Count in Vehicles

Lane 1 = Nearest Kerb

Advanced Transport Research	Job Number & Name:	8551 Barton Road, Havant
Site 3 - Barton Road/Eastleigh Road	Client:	C & A Consulting Engineers
Queue Lengths	Date:	Thursday 11 June 2015

	Barton Road Right Turn		Eastleigh Road	
Times	Lane 1	Lane 2	Lane 1	Lane 2
16:00 - 16:05	0	1	1	2
16:05 - 16:10	0	2	2	1
16:10 - 16:15	0	2	5	3
16:15 - 16:20	0	0	2	1
16:20 - 16:25	0	1	1	1
16:25 - 16:30	0	0	1	1
16:30 - 16:35	0	0	1	1
16:35 - 16:40	0	0	2	2
16:40 - 16:45	0	0	0	1
16:45 - 16:50	0	1	1	1
16:50 - 16:55	0	1	2	1
16:55 - 17:00	0	0	1	1
17:00 - 17:05	0	0	1	2
17:05 - 17:10	0	2	1	0
17:10 - 17:15	0	2	1	2
17:15 - 17:20	0	1	1	2
17:20 - 17:25	0	2	1	1
17:25 - 17:30	0	2	2	1
17:30 - 17:35	0	2	1	1
17:35 - 17:40	0	1	2	1
17:40 - 17:45	0	1	1	1
17:45 - 17:50	0	1	5	1
17:50 - 17:55	0	1	0	2
17:55 - 18:00	0	0	1	3
18:00 - 18:05	0	3	1	3
18:05 - 18:10	0	1	0	2
18:10 - 18:15	0	1	1	1
18:15 - 18:20	0	1	0	0
18:20 - 18:25	0	0	1	2
18:25 - 18:30	0	3	2	1
18:30 - 18:35	0	0	0	1
18:35 - 18:40	0	0	1	1
18:40 - 18:45	0	0	2	1
18:45 - 18:50	0	0	2	1
18:50 - 18:55	0	1	3	0
18:55 - 19:00	0	1	1	1

advanced transport research

Job Number & Name: 8551 Barton Road, Havant

Site Number/Name: Site 3 - Barton Road/Eastleigh Road

Client: C & A Consulting Engineers

Date: 11/06/2015

Weather:

Comments:

Advanced Transport Research	*Job Number & Name:*	**8551 Barton Road, Havant**
Site 3 - Barton Road/Eastleigh Road	*Client:*	**C & A Consulting Engineers**
Site Plan	*Date:*	**Thursday 11 Jun 2015**

Advanced Transport Research	*Job Number & Name:*	**8551 Barton Road, Ha**
Site 3 - Barton Road/Eastleigh Road	*Client:*	**C & A Consulting Engi**
Flow Diagram	*Date:*	**Thursday 11 Jun 2015**

Select Period **07:00**

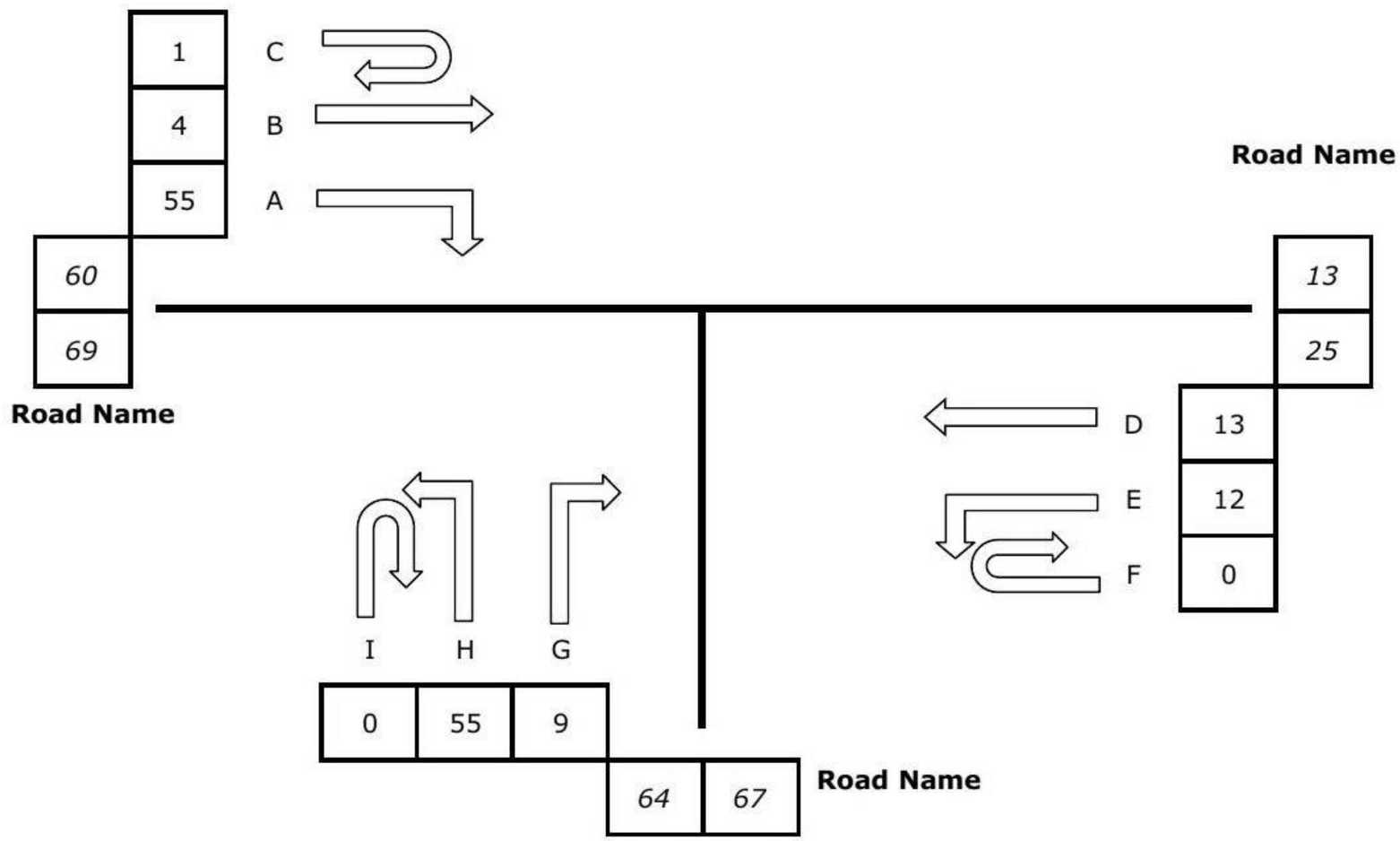

Advanced Transport Research
Site 3 - Barton Road/Eastleigh Road
Classified Counts

Job Number & Name: 8551 Bartc
Client: C & A Cons
Date: Thursday 11

Times	Movement A							Movement B							Movement C							Movement D							Movement E							Movement F							Movement G							Movement H								
	Cars	LGV	OGV 1	OGV 2	PSV	M/B	Cyc	Cars	LGV	OGV 1	OGV 2	PSV	M/B	Cyc	Cars	LGV	OGV 1	OGV 2	PSV	M/B	Cyc	Cars	LGV	OGV 1	OGV 2	PSV	M/B	Cyc	Cars	LGV	OGV 1	OGV 2	PSV	M/B	Cyc	Cars	LGV	OGV 1	OGV 2	PSV	M/B	Cyc	Cars	LGV	OGV 1	OGV 2	PSV	M/B	Cyc	Cars	LGV	OGV 1	OGV 2	PSV	M/B	Cyc	Cars	LGV
07:00 - 07:15	44	8	3	0	0	0	0	1	1	1	1	0	0	0	1	0	0	0	0	0	0	10	3	0	0	0	0	0	10	0	2	0	0	0	0	0	0	0	0	0	0	0	6	0	0	0	0	1	2	38	12	2	0	0	2	1	0	0
07:15 - 07:30	50	6	0	0	0	1	1	4	0	0	0	0	0	1	0	0	0	0	0	0	0	6	3	0	0	0	0	0	16	2	0	0	0	0	0	0	0	0	0	0	0	0	8	4	0	0	0	0	0	46	25	0	2	0	2	0	0	0
07:30 - 07:45	59	5	1	1	0	0	1	5	1	0	0	0	0	0	0	0	0	0	0	0	0	16	1	1	0	0	0	0	22	2	1	0	0	1	0	0	0	0	0	0	0	0	9	2	0	0	0	0	0	53	19	4	1	0	1	0	1	0
07:45 - 08:00	98	12	1	0	0	0	1	4	0	0	0	0	0	0	0	0	0	0	0	0	0	15	1	1	0	0	0	0	25	1	1	0	0	1	1	0	0	0	0	0	0	0	13	1	0	0	0	0	0	71	24	2	0	0	0	0	0	0
Hourly Total	**251**	**31**	**5**	**1**	**0**	**1**	**3**	**14**	**2**	**1**	**1**	**0**	**0**	**1**	**1**	**0**	**0**	**0**	**0**	**0**	**0**	**47**	**8**	**2**	**0**	**0**	**0**	**0**	**73**	**5**	**4**	**0**	**0**	**2**	**1**	**0**	**0**	**0**	**0**	**0**	**0**	**0**	**36**	**7**	**0**	**0**	**0**	**1**	**2**	**208**	**80**	**8**	**3**	**0**	**5**	**1**	**1**	**0**
08:00 - 08:15	94	7	0	2	0	1	1	9	3	0	0	0	0	0	0	0	0	0	0	0	0	13	1	0	0	0	0	0	40	4	0	0	1	0	0	0	0	0	0	0	0	0	25	3	1	0	0	1	0	77	14	2	2	0	0	2	0	0
08:15 - 08:30	108	9	1	1	1	0	0	1	0	0	0	0	0	0	0	0	0	0	0	0	0	15	0	0	0	0	1	0	40	3	0	0	0	1	0	0	0	0	0	0	0	0	24	1	1	0	0	0	0	73	15	6	1	0	0	1	0	0
08:30 - 08:45	101	4	4	2	0	2	0	9	0	0	0	0	0	0	1	0	0	0	0	0	0	18	1	0	0	0	0	0	42	1	0	0	0	0	0	0	0	0	0	0	0	0	19	1	0	0	0	0	0	82	10	4	1	0	0	1	0	0
08:45 - 09:00	108	7	2	0	1	1	0	6	0	0	0	0	0	0	1	0	0	0	0	0	0	19	2	0	0	0	0	0	30	2	0	0	0	0	0	0	0	0	0	0	0	0	19	0	3	0	0	1	0	73	11	1	4	0	0	0	0	0
Hourly Total	**411**	**27**	**7**	**5**	**2**	**4**	**1**	**25**	**3**	**0**	**0**	**0**	**0**	**0**	**2**	**0**	**0**	**0**	**0**	**0**	**0**	**65**	**4**	**0**	**0**	**0**	**1**	**0**	**152**	**10**	**0**	**0**	**1**	**1**	**0**	**0**	**0**	**0**	**0**	**0**	**0**	**0**	**87**	**5**	**5**	**0**	**0**	**2**	**0**	**305**	**50**	**13**	**8**	**0**	**0**	**4**	**0**	**0**
09:00 - 09:15	90	8	1	5	1	0	0	11	0	0	0	0	0	1	0	0	0	0	0	0	0	9	1	0	0	0	0	0	19	1	1	1	0	1	0	0	0	0	0	0	0	0	10	2	2	0	0	0	0	44	13	4	2	0	0	0	0	0
09:15 - 09:30	61	6	4	1	0	0	0	8	2	0	0	0	0	0	0	1	0	0	0	0	0	13	2	0	0	0	0	0	13	1	2	0	0	0	0	0	0	0	0	0	0	0	13	4	0	0	0	0	0	54	16	1	0	1	0	0	0	0
09:30 - 09:45	71	9	1	1	0	1	0	4	0	0	0	0	0	0	1	0	0	0	0	0	0	6	2	0	0	0	0	0	16	2	1	0	0	0	0	0	0	0	0	0	0	0	23	0	0	0	0	0	0	56	4	1	1	0	0	0	0	0
09:45 - 10:00	46	7	2	2	0	2	1	8	2	0	0	0	0	0	0	0	0	0	0	0	0	8	1	0	0	0	0	0	16	1	1	0	0	0	0	0	0	0	0	0	0	0	12	3	1	0	0	0	0	64	8	0	3	0	0	0	0	0
Hourly Total	**268**	**30**	**8**	**9**	**1**	**3**	**1**	**31**	**4**	**0**	**0**	**0**	**0**	**1**	**1**	**1**	**0**	**0**	**0**	**0**	**0**	**36**	**6**	**0**	**0**	**0**	**0**	**0**	**64**	**5**	**5**	**1**	**0**	**1**	**0**	**0**	**0**	**0**	**0**	**0**	**0**	**0**	**58**	**9**	**3**	**0**	**0**	**0**	**0**	**218**	**41**	**6**	**6**	**1**	**0**	**0**	**0**	**0**
16:00 - 16:15	72	17	1	3	0	0	0	16	0	2	0	0	0	1	0	0	0	0	0	0	0	12	2	0	0	0	0	0	18	2	3	0	0	0	1	0	0	0	0	0	0	0	29	2	0	0	1	0	0	82	8	3	2	0	0	0	0	0
16:15 - 16:30	87	21	4	5	0	2	0	11	1	0	0	0	0	0	0	0	0	0	0	0	0	4	0	0	0	0	0	0	23	6	0	0	0	1	0	0	0	0	0	0	0	0	24	3	0	0	0	0	1	103	15	2	0	0	1	1	0	0
16:30 - 16:45	91	22	3	1	0	4	0	15	0	0	0	0	0	0	0	0	0	0	0	0	0	12	1	0	0	0	0	0	19	4	0	0	0	0	0	0	0	0	0	0	0	0	19	2	1	0	0	1	0	112	15	3	0	0	0	0	0	0
16:45 - 17:00	86	23	3	0	0	0	0	10	2	0	0	0	0	0	0	0	0	0	0	0	0	8	2	0	0	0	0	0	19	8	0	0	0	0	0	0	0	0	0	0	0	0	27	3	0	0	0	1	0	85	4	0	0	0	0	0	0	0
Hourly Total	**336**	**83**	**11**	**9**	**0**	**6**	**0**	**52**	**3**	**2**	**0**	**0**	**0**	**1**	**0**	**0**	**0**	**0**	**0**	**0**	**0**	**36**	**5**	**0**	**0**	**0**	**0**	**0**	**79**	**20**	**3**	**0**	**0**	**1**	**1**	**0**	**0**	**0**	**0**	**0**	**0**	**0**	**99**	**10**	**1**	**0**	**1**	**2**	**1**	**382**	**42**	**8**	**2**	**0**	**1**	**1**	**0**	**0**
17:00 - 17:15	84	13	2	0	1	2	0	16	1	0	0	0	1	0	0	0	0	0	0	0	0	7	1	0	0	0	0	0	16	2	0	0	0	0	0	0	0	0	0	0	0	0	25	3	1	0	0	0	2	93	11	0	0	0	1	1	0	0
17:15 - 17:30	112	10	2	0	0	4	1	19	3	0	0	0	0	0	0	0	0	0	0	0	0	13	0	0	0	0	0	0	17	2	1	0	0	1	0	0	0	0	0	0	0	0	27	3	1	1	0	2	0	88	9	1	0	0	4	0	0	0
17:30 - 17:45	109	17	0	0	0	1	1	17	2	0	0	0	0	0	0	0	0	0	0	0	0	11	0	0	0	0	0	0	19	4	0	0	0	0	0	0	0	0	0	0	0	0	31	1	1	0	0	0	1	77	11	0	0	0	0	0	0	0
17:45 - 18:00	93	8	0	1	0	1	0	14	2	0	0	0	0	0	1	0	0	0	0	0	0	9	1	0	0	0	0	1	21	3	0	0	0	0	0	0	0	0	0	0	0	0	27	0	2	0	0	1	0	68	9	0	0	0	3	0	0	0
Hourly Total	**398**	**48**	**4**	**1**	**1**	**8**	**2**	**66**	**8**	**0**	**0**	**0**	**1**	**0**	**1**	**0**	**0**	**0**	**0**	**0**	**0**	**40**	**2**	**0**	**0**	**0**	**0**	**1**	**73**	**11**	**1**	**0**	**0**	**1**	**0**	**0**	**0**	**0**	**0**	**0**	**0**	**0**	**110**	**7**	**5**	**1**	**0**	**3**	**3**	**326**	**40**	**1**	**0**	**0**	**8**	**1**	**0**	**0**
18:00 - 18:15	73	9	0	0	0	3	0	16	2	0	0	0	0	0	0	0	0	0	0	0	0	11	3	0	0	0	0	0	21	2	1	0	0	0	0	0	0	0	0	0	0	0	30	1	1	0	0	1	0	74	4	1	1	0	1	0	0	0
18:15 - 18:30	72	4	0	0	0	0	0	20	1	0	0	0	0	0	0	0	0	0	0	0	0	7	0	0	0	0	0	0	17	0	0	0	0	0	0	0	0	0	0	0	0	0	25	2	0	0	0	0	0	76	6	2	0	0	0	3	0	0
18:30 - 18:45	40	11	0	0	0	2	0	10	0	0	0	0	0	1	0	0	0	0	0	0	0	9	1	0	0	0	0	0	17	5	0	0	0	0	0	0	0	0	0	0	0	0	11	1	0	0	0	0	0	55	6	1	0	0	2	0	0	0
18:45 - 19:00	59	1	1	0	0	1	0	10	0	0	0	0	0	0	0	0	0	0	0	0	0	5	1	0	0	0	0	0	18	3	0	0	0	0	0	0	0	0	0	0	0	0	16	3	0	0	0	0	0	63	7	0	0	0	1	2	0	0
Hourly Total	**244**	**25**	**1**	**0**	**0**	**6**	**0**	**56**	**3**	**0**	**0**	**0**	**0**	**1**	**0**	**0**	**0**	**0**	**0**	**0**	**0**	**32**	**5**	**0**	**0**	**0**	**0**	**0**	**73**	**10**	**1**	**0**	**0**	**0**	**0**	**0**	**0**	**0**	**0**	**0**	**0**	**0**	**82**	**7**	**1**	**0**	**0**	**1**	**0**	**268**	**23**	**4**	**1**	**0**	**4**	**5**	**0**	**0**

on Road, Havant
ulting Engineers
June 2015

Movement I

OGV 1	OGV 2	PSV	M/B	Cyc
0	0	0	0	0
0	0	0	0	0
0	0	0	0	0
0	0	0	0	0
0	**0**	**0**	**0**	**0**
0	0	0	0	0
0	0	0	0	0
0	0	0	0	0
0	0	0	0	0
0	**0**	**0**	**0**	**0**
0	0	0	0	0
0	0	0	0	0
0	0	0	0	0
0	0	0	0	0
0	**0**	**0**	**0**	**0**

0	0	0	0	0
0	0	0	0	0
0	0	0	0	0
0	0	0	0	0
0	**0**	**0**	**0**	**0**
0	0	0	0	0
0	0	0	0	0
0	0	0	0	0
0	0	0	0	0
0	**0**	**0**	**0**	**0**
0	0	0	0	0
0	0	0	0	0
0	0	0	0	0
0	0	0	0	0
0	**0**	**0**	**0**	**0**

Advanced Transport Research

Site 3 - Barton Road/Eastleigh Road

PCU Values

Job Number & Name	8551 Barton Road, Havant
Client	C & A Consulting Engineers
Date	Thursday 11 June 2015

Times	Movement A								Movement B								Movement C								Movement D							
	Cars	LGV	OGV 1	OGV 2	PSV	M/B	Cyc	Total	Cars	LGV	OGV 1	OGV 2	PSV	M/B	Cyc	Total	Cars	LGV	OGV 1	OGV 2	PSV	M/B	Cyc	Total	Cars	LGV	OGV 1	OGV 2	PSV	M/B	Cyc	Total
07:00 - 07:15	45.0	0.0	4.0	0.0	0.0	0.0	0.0	49.0	1.0	0.0	1.0	0.0	0.0	0.0	0.0	2.0	1.0	0.0	0.0	0.0	0.0	0.0	0.0	1.0	15.0	0.0	0.0	0.0	0.0	0.0	0.0	15.0
07:15 - 07:30	50.0	0.0	0.0	0.0	0.0	0.0	0.0	50.0	0.0	0.0	0.0	0.0	0.0	0.0	0.0	0.0	0.0	0.0	0.0	0.0	0.0	0.0	0.0	0.0	6.0	0.0	0.0	0.0	0.0	0.0	0.0	6.0
07:30 - 07:45	56.0	0.0	1.0	0.0	0.0	0.0	0.0	57.0	0.0	0.0	0.0	0.0	0.0	0.0	0.0	0.0	0.0	0.0	0.0	0.0	0.0	0.0	0.0	0.0	19.0	1.0	1.0	0.0	0.0	0.0	0.0	21.0
07:45 - 08:00	68.0	12.0	1.0	0.0	0.0	0.0	0.0	81.0	0.0	0.0	0.0	0.0	0.0	0.0	0.0	0.0	0.0	0.0	0.0	0.0	0.0	0.0	0.0	0.0	18.0	1.0	1.0	0.0	0.0	0.0	0.0	21.0
Hourly Total	219.0	12.0	6.0	0.0	0.0	0.0	0.0	237.0	1.0	0.0	1.0	0.0	0.0	0.0	0.0	2.0	1.0	0.0	0.0	0.0	0.0	0.0	0.0	1.0	57.0	2.0	2.0	0.0	0.0	0.0	0.0	63.0
08:00 - 08:15	96.0	7.0	0.0	4.0	0.0	0.0	0.0	108.0	0.0	0.0	0.0	0.0	0.0	0.0	0.0	0.0	0.0	0.0	0.0	0.0	0.0	0.0	0.0	0.0	13.0	1.0	0.0	0.0	0.0	0.0	0.0	14.0
08:15 - 08:30	108.0	9.0	1.0	2.0	0.0	0.0	0.0	120.0	1.0	0.0	0.0	0.0	0.0	0.0	0.0	1.0	0.0	0.0	0.0	0.0	0.0	0.0	0.0	0.0	15.0	0.0	0.0	0.0	0.0	0.0	0.0	15.0
08:30 - 08:45	120.0	8.0	4.0	0.0	0.0	0.0	0.0	132.0	0.0	0.0	0.0	0.0	0.0	0.0	0.0	0.0	1.0	0.0	0.0	0.0	0.0	0.0	0.0	1.0	18.0	1.0	0.0	0.0	0.0	0.0	0.0	19.0
08:45 - 09:00	108.0	7.0	0.0	0.0	0.0	0.0	0.0	115.0	0.0	0.0	0.0	0.0	0.0	0.0	0.0	0.0	1.0	0.0	0.0	0.0	0.0	0.0	0.0	1.0	19.0	1.0	0.0	0.0	0.0	0.0	0.0	20.0
Hourly Total	432.0	31.0	5.0	6.0	0.0	0.0	0.0	474.0	1.0	0.0	0.0	0.0	0.0	0.0	0.0	1.0	2.0	0.0	0.0	0.0	0.0	0.0	0.0	2.0	65.0	4.0	0.0	0.0	0.0	0.0	0.0	69.0
09:00 - 09:15	90.0	8.0	1.0	11.0	0.0	0.0	0.0	110.0	1.0	0.0	0.0	0.0	0.0	0.0	0.0	1.0	0.0	0.0	0.0	0.0	0.0	0.0	0.0	0.0	9.0	1.0	0.0	0.0	0.0	0.0	0.0	10.0
09:15 - 09:30	81.0	6.0	0.0	2.0	0.0	0.0	0.0	89.0	0.0	0.0	0.0	0.0	0.0	0.0	0.0	0.0	0.0	1.0	0.0	0.0	0.0	0.0	0.0	1.0	13.0	2.0	0.0	0.0	0.0	0.0	0.0	15.0
09:30 - 09:45	71.0	9.0	1.0	2.0	0.0	0.0	0.0	83.0	0.0	0.0	0.0	0.0	0.0	0.0	0.0	0.0	1.0	0.0	0.0	0.0	0.0	0.0	0.0	1.0	6.0	2.0	0.0	0.0	0.0	0.0	0.0	8.0
09:45 - 10:00	55.0	7.0	3.0	4.0	0.0	0.0	0.0	69.0	0.0	0.0	0.0	0.0	0.0	0.0	0.0	0.0	0.0	0.0	0.0	0.0	0.0	0.0	0.0	0.0	9.0	1.0	0.0	0.0	0.0	0.0	0.0	10.0
Hourly Total	297.0	30.0	5.0	19.0	0.0	0.0	0.0	351.0	1.0	0.0	0.0	0.0	0.0	0.0	0.0	1.0	1.0	1.0	0.0	0.0	0.0	0.0	0.0	2.0	37.0	6.0	0.0	0.0	0.0	0.0	0.0	43.0
10:00 - 10:15	72.0	17.0	1.0	6.0	0.0	0.0	0.0	96.0	1.0	0.0	1.0	0.0	0.0	0.0	0.0	2.0	0.0	0.0	0.0	0.0	0.0	0.0	0.0	0.0	12.0	2.0	0.0	0.0	0.0	0.0	0.0	14.0
10:15 - 10:30	87.0	21.0	6.0	11.0	0.0	0.0	0.0	126.0	1.0	0.0	0.0	0.0	0.0	0.0	0.0	1.0	0.0	0.0	0.0	0.0	0.0	0.0	0.0	0.0	6.0	0.0	0.0	0.0	0.0	0.0	0.0	6.0
10:30 - 10:45	96.0	22.0	6.0	2.0	0.0	1.0	0.0	131.0	1.0	0.0	0.0	0.0	0.0	0.0	0.0	1.0	0.0	0.0	0.0	0.0	0.0	0.0	0.0	0.0	12.0	1.0	0.0	0.0	0.0	0.0	0.0	13.0
10:45 - 11:00	96.0	23.0	4.0	0.0	0.0	0.0	0.0	123.0	1.0	0.0	0.0	0.0	0.0	0.0	0.0	1.0	0.0	0.0	0.0	0.0	0.0	0.0	0.0	0.0	9.0	2.0	0.0	0.0	0.0	0.0	0.0	11.0
Hourly Total	351.0	83.0	17.0	19.0	0.0	1.0	0.0	471.0	4.0	0.0	1.0	0.0	0.0	0.0	0.0	5.0	0.0	0.0	0.0	0.0	0.0	0.0	0.0	0.0	39.0	5.0	0.0	0.0	0.0	0.0	0.0	44.0
11:00 - 11:15	96.0	22.0	4.0	8.0	0.0	0.0	0.0	130.0	1.0	0.0	0.0	0.0	0.0	0.0	0.0	1.0	0.0	0.0	0.0	0.0	0.0	0.0	0.0	0.0	12.0	1.0	0.0	0.0	0.0	0.0	0.0	13.0
11:15 - 11:30	84.0	22.0	8.0	13.0	0.0	1.0	0.0	128.0	1.0	0.0	0.0	0.0	0.0	0.0	0.0	1.0	0.0	0.0	0.0	0.0	0.0	0.0	0.0	0.0	12.0	1.0	0.0	0.0	0.0	0.0	0.0	13.0
11:30 - 11:45	108.0	18.0	3.0	6.0	0.0	1.0	0.0	136.0	1.0	0.0	0.0	0.0	0.0	0.0	0.0	1.0	0.0	0.0	0.0	0.0	0.0	0.0	0.0	0.0	12.0	1.0	0.0	0.0	0.0	0.0	0.0	13.0
11:45 - 12:00	108.0	17.0	0.0	0.0	0.0	0.0	0.0	125.0	1.0	0.0	0.0	0.0	0.0	0.0	0.0	1.0	0.0	0.0	0.0	0.0	0.0	0.0	0.0	0.0	12.0	1.0	0.0	0.0	0.0	0.0	0.0	13.0
Hourly Total	396.0	79.0	15.0	27.0	0.0	3.0	0.0	520.0	4.0	0.0	0.0	0.0	0.0	0.0	0.0	4.0	0.0	0.0	0.0	0.0	0.0	0.0	0.0	0.0	48.0	4.0	0.0	0.0	0.0	0.0	0.0	52.0
12:00 - 12:15	96.0	18.0	0.0	2.0	0.0	0.0	0.0	116.0	1.0	0.0	0.0	0.0	0.0	0.0	0.0	1.0	0.0	0.0	0.0	0.0	0.0	0.0	0.0	0.0	12.0	1.0	0.0	0.0	0.0	0.0	0.0	13.0
12:15 - 12:30	84.0	16.0	0.0	2.0	0.0	0.0	0.0	102.0	1.0	0.0	0.0	0.0	0.0	0.0	0.0	1.0	0.0	0.0	0.0	0.0	0.0	0.0	0.0	0.0	12.0	1.0	0.0	0.0	0.0	0.0	0.0	13.0
12:30 - 12:45	72.0	6.0	0.0	0.0	0.0	0.0	0.0	78.0	0.0	0.0	0.0	0.0	0.0	0.0	0.0	0.0	0.0	0.0	0.0	0.0	0.0	0.0	0.0	0.0	12.0	1.0	0.0	0.0	0.0	0.0	0.0	13.0
12:45 - 13:00	60.0	11.0	0.0	0.0	0.0	0.0	0.0	71.0	0.0	0.0	0.0	0.0	0.0	0.0	0.0	0.0	0.0	0.0	0.0	0.0	0.0	0.0	0.0	0.0	12.0	1.0	0.0	0.0	0.0	0.0	0.0	13.0
Hourly Total	312.0	51.0	0.0	4.0	0.0	0.0	0.0	367.0	2.0	0.0	0.0	0.0	0.0	0.0	0.0	2.0	0.0	0.0	0.0	0.0	0.0	0.0	0.0	0.0	48.0	4.0	0.0	0.0	0.0	0.0	0.0	52.0
13:00 - 13:15	84.0	16.0	0.0	2.0	0.0	0.0	0.0	102.0	1.0	0.0	0.0	0.0	0.0	0.0	0.0	1.0	0.0	0.0	0.0	0.0	0.0	0.0	0.0	0.0	12.0	1.0	0.0	0.0	0.0	0.0	0.0	13.0
13:15 - 13:30	72.0	6.0	0.0	0.0	0.0	0.0	0.0	78.0	0.0	0.0	0.0	0.0	0.0	0.0	0.0	0.0	0.0	0.0	0.0	0.0	0.0	0.0	0.0	0.0	12.0	1.0	0.0	0.0	0.0	0.0	0.0	13.0
13:30 - 13:45	60.0	11.0	0.0	0.0	0.0	0.0	0.0	71.0	0.0	0.0	0.0	0.0	0.0	0.0	0.0	0.0	0.0	0.0	0.0	0.0	0.0	0.0	0.0	0.0	12.0	1.0	0.0	0.0	0.0	0.0	0.0	13.0
13:45 - 14:00	36.0	1.0	1.0	0.0	0.0	0.0	0.0	39.0	0.0	0.0	0.0	0.0	0.0	0.0	0.0	0.0	0.0	0.0	0.0	0.0	0.0	0.0	0.0	0.0	6.0	1.0	0.0	0.0	0.0	0.0	0.0	7.0
Hourly Total	252.0	34.0	1.0	2.0	0.0	0.0	0.0	289.0	1.0	0.0	0.0	0.0	0.0	0.0	0.0	1.0	0.0	0.0	0.0	0.0	0.0	0.0	0.0	0.0	48.0	4.0	0.0	0.0	0.0	0.0	0.0	52.0
14:00 - 14:15	###	31.0	2.0	2.0	0.0	0.0	0.0	###	1.0	0.0	0.0	0.0	0.0	0.0	0.0	1.0	0.0	0.0	0.0	0.0	0.0	0.0	0.0	0.0	12.0	1.0	0.0	0.0	0.0	0.0	0.0	13.0
14:15 - 14:30	###	33.0	4.0	8.0	0.0	0.0	0.0	###	1.0	0.0	0.0	0.0	0.0	0.0	0.0	1.0	0.0	0.0	0.0	0.0	0.0	0.0	0.0	0.0	12.0	1.0	0.0	0.0	0.0	0.0	0.0	13.0
14:30 - 14:45	###	32.0	8.0	13.0	0.0	1.0	0.0	###	1.0	0.0	0.0	0.0	0.0	0.0	0.0	1.0	0.0	0.0	0.0	0.0	0.0	0.0	0.0	0.0	12.0	1.0	0.0	0.0	0.0	0.0	0.0	13.0
14:45 - 15:00	###	27.0	20.0	14.0	0.0	1.0	0.0	###	1.0	0.0	0.0	0.0	0.0	0.0	0.0	1.0	0.0	0.0	0.0	0.0	0.0	0.0	0.0	0.0	12.0	1.0	0.0	0.0	0.0	0.0	0.0	13.0
Hourly Total	###	123.0	34.0	37.0	0.0	2.0	0.0	###	4.0	0.0	0.0	0.0	0.0	0.0	0.0	4.0	0.0	0.0	0.0	0.0	0.0	0.0	0.0	0.0	48.0	4.0	0.0	0.0	0.0	0.0	0.0	52.0
15:00 - 15:15	###	31.0	2.0	2.0	0.0	0.0	0.0	###	1.0	0.0	0.0	0.0	0.0	0.0	0.0	1.0	0.0	0.0	0.0	0.0	0.0	0.0	0.0	0.0	12.0	1.0	0.0	0.0	0.0	0.0	0.0	13.0
15:15 - 15:30	###	33.0	4.0	8.0	0.0	0.0	0.0	###	1.0	0.0	0.0	0.0	0.0	0.0	0.0	1.0	0.0	0.0	0.0	0.0	0.0	0.0	0.0	0.0	12.0	1.0	0.0	0.0	0.0	0.0	0.0	13.0
15:30 - 15:45	###	32.0	8.0	13.0	0.0	1.0	0.0	###	1.0	0.0	0.0	0.0	0.0	0.0	0.0	1.0	0.0	0.0	0.0	0.0	0.0	0.0	0.0	0.0	12.0	1.0	0.0	0.0	0.0	0.0	0.0	13.0
15:45 - 16:00	###	27.0	20.0	14.0	0.0	1.0	0.0	###	1.0	0.0	0.0	0.0	0.0	0.0	0.0	1.0	0.0	0.0	0.0	0.0	0.0	0.0	0.0	0.0	12.0	1.0	0.0	0.0	0.0	0.0	0.0	13.0
Hourly Total	###	123.0	34.0	37.0	0.0	2.0	0.0	###	4.0	0.0	0.0	0.0	0.0	0.0	0.0	4.0	0.0	0.0	0.0	0.0	0.0	0.0	0.0	0.0	48.0	4.0	0.0	0.0	0.0	0.0	0.0	52.0
16:00 - 16:15	###	31.0	2.0	2.0	0.0	0.0	0.0	###	1.0	0.0	0.0	0.0	0.0	0.0	0.0	1.0	0.0	0.0	0.0	0.0	0.0	0.0	0.0	0.0	12.0	1.0	0.0	0.0	0.0	0.0	0.0	13.0
16:15 - 16:30	###	33.0	4.0	8.0	0.0	0.0	0.0	###	1.0	0.0	0.0	0.0	0.0	0.0	0.0	1.0	0.0	0.0	0.0	0.0	0.0	0.0	0.0	0.0	12.0	1.0	0.0	0.0	0.0	0.0	0.0	13.0
16:30 - 16:45	###	32.0	8.0	13.0	0.0	1.0	0.0	###	1.0	0.0	0.0	0.0	0.0	0.0	0.0	1.0	0.0	0.0	0.0	0.0	0.0	0.0	0.0	0.0	12.0	1.0	0.0	0.0	0.0	0.0	0.0	13.0
16:45 - 17:00	###	27.0	20.0	14.0	0.0	1.0	0.0	###	1.0	0.0	0.0	0.0	0.0	0.0	0.0	1.0	0.0	0.0	0.0	0.0	0.0	0.0	0.0	0.0	12.0	1.0	0.0	0.0	0.0	0.0	0.0	13.0
Hourly Total	###	123.0	34.0	37.0	0.0	2.0	0.0	###	4.0	0.0	0.0	0.0	0.0	0.0	0.0	4.0	0.0	0.0	0.0	0.0	0.0	0.0	0.0	0.0	48.0	4.0	0.0	0.0	0.0	0.0	0.0	52.0
17:00 - 17:15	###	31.0	2.0	2.0	0.0	0.0	0.0	###	1.0	0.0	0.0	0.0	0.0	0.0	0.0	1.0	0.0	0.0	0.0	0.0	0.0	0.0	0.0	0.0	12.0	1.0	0.0	0.0	0.0	0.0	0.0	13.0
17:15 - 17:30	###	33.0	4.0	8.0	0.0	0.0	0.0	###	1.0	0.0	0.0	0.0	0.0	0.0	0.0	1.0	0.0	0.0	0.0	0.0	0.0	0.0	0.0	0.0	12.0	1.0	0.0	0.0	0.0	0.0	0.0	13.0
17:30 - 17:45	###	32.0	8.0	13.0	0.0	1.0	0.0	###	1.0	0.0	0.0	0.0	0.0	0.0	0.0	1.0	0.0	0.0	0.0	0.0	0.0	0.0	0.0	0.0	12.0	1.0	0.0	0.0	0.0	0.0	0.0	13.0
17:45 - 18:00	###	27.0	20.0	14.0	0.0	1.0	0.0	###	1.0	0.0	0.0	0.0	0.0	0.0	0.0	1.0	0.0	0.0	0.0	0.0	0.0	0.0	0.0	0.0	12.0	1.0	0.0	0.0	0.0	0.0	0.0	13.0
Hourly Total	###	123.0	34.0	37.0	0.0	2.0	0.0	###	4.0	0.0	0.0	0.0	0.0	0.0	0.0	4.0	0.0	0.0	0.0	0.0	0.0	0.0	0.0	0.0	48.0	4.0	0.0	0.0	0.0	0.0	0.0	52.0
18:00 - 18:15	###	31.0	2.0	2.0	0.0	0.0	0.0	###	1.0	0.0	0.0	0.0	0.0	0.0	0.0	1.0	0.0	0.0	0.0	0.0	0.0	0.0	0.0	0.0	12.0	1.0	0.0	0.0	0.0	0.0	0.0	13.0
18:15 - 18:30	###	33.0	4.0	8.0	0.0	0.0	0.0	###	1.0	0.0	0.0	0.0	0.0	0.0	0.0	1.0	0.0	0.0	0.0	0.0	0.0	0.0	0.0	0.0	12.0	1.0	0.0	0.0	0.0	0.0	0.0	13.0
18:30 - 18:45	###	32.0	8.0	13.0	0.0	1.0	0.0	###	1.0	0.0	0.0	0.0	0.0	0.0	0.0	1.0	0.0	0.0	0.0	0.0	0.0	0.0	0.0	0.0	12.0	1.0	0.0	0.0	0.0	0.0	0.0	13.0
18:45 - 19:00	###	27.0	20.0	14.0	0.0	1.0	0.0	###	1.0	0.0	0.0	0.0	0.0	0.0	0.0	1.0	0.0	0.0	0.0	0.0	0.0	0.0	0.0	0.0	12.0	1.0	0.0	0.0	0.0	0.0	0.0	13.0
Hourly Total	###	123.0	34.0	37.0	0.0	2.0	0.0	###	4.0	0.0	0.0	0.0	0.0	0.0	0.0	4.0	0.0	0.0	0.0	0.0	0.0	0.0	0.0	0.0	48.0	4.0	0.0	0.0	0.0	0.0	0.0	52.0

Times	Movement E								Movement F								Movement G								Movement H								Movement I							
	Cars	LGV	OGV 1	OGV 2	PSV	M/B	Cyc	Total	Cars	LGV	OGV 1	OGV 2	PSV	M/B	Cyc	Total	Cars	LGV	OGV 1	OGV 2	PSV	M/B	Cyc	Total	Cars	LGV	OGV 1	OGV 2	PSV	M/B	Cyc	Total	Cars	LGV	OGV 1	OGV 2	PSV	M/B	Cyc	Total
07:00 - 07:15	15.0	0.0	0.0	0.0	0.0	0.0	0.0	15.0	0.0	0.0	0.0	0.0	0.0	0.0	0.0	0.0	0.0	0.0	0.0	0.0	0.0	0.4	0.0	0.4	6.0	0.0	0.0	0.0	0.0	0.0	0.0	6.0	0.0	0.0	0.0	0.0	0.0	0.0	0.0	0.0
07:15 - 07:30	16.0	0.0	0.0	0.0	0.0	0.0	0.0	16.0	0.0	0.0	0.0	0.0	0.0	0.0	0.0	0.0	0.0	0.0	0.0	0.0	0.0	0.0	0.0	0.0	9.0	0.0	0.0	0.0	0.0	0.0	0.0	9.0	0.0	0.0	0.0	0.0	0.0	0.0	0.0	0.0
07:30 - 07:45	22.0	0.0	1.0	0.0	0.0	0.0	0.0	23.0	0.0	0.0	0.0	0.0	0.0	0.0	0.0	0.0	0.0	0.0	0.0	0.0	0.0	0.0	0.0	0.0	13.0	1.0	0.0	0.0	0.0	0.0	0.0	14.0	0.0	0.0	0.0	0.0	0.0	0.0	0.0	0.0
07:45 - 08:00	28.0	1.0	1.0	0.0	0.0	0.0	0.0	31.0	0.0	0.0	0.0	0.0	0.0	0.0	0.0	0.0	0.0	0.0	0.0	0.0	0.0	0.0	0.0	0.0	13.0	1.0	0.0	0.0	0.0	0.0	0.0	14.0	0.0	0.0	0.0	0.0	0.0	0.0	0.0	0.0
Hourly Total	81.0	1.0	2.0	0.0	0.0	0.0	0.0	85.0	0.0	0.0	0.0	0.0	0.0	0.0	0.0	0.0	0.0	0.0	0.0	0.0	0.0	0.4	0.0	0.4	41.0	2.0	0.0	0.0	0.0	0.0	0.0	43.0	0.0	0.0	0.0	0.0	0.0	0.0	0.0	0.0
08:00 - 08:15	40.0	1.0	0.0	0.0	0.0	0.0	0.0	41.0	0.0	0.0	0.0	0.0	0.0	0.0	0.0	0.0	0.0	0.0	0.0	0.0	0.0	0.0	0.0	0.0	28.0	3.0	1.0	0.0	0.0	0.0	0.0	32.0	0.0	0.0	0.0	0.0	0.0	0.0	0.0	0.0
08:15 - 08:30	43.0	1.0	0.0	0.0	0.0	0.0	0.0	44.0	0.0	0.0	0.0	0.0	0.0	0.0	0.0	0.0	0.0	0.0	0.0	0.0	0.0	0.0	0.0	0.0	24.0	1.0	1.0	0.0	0.0	0.0	0.0	26.0	0.0	0.0	0.0	0.0	0.0	0.0	0.0	0.0
08:30 - 08:45	40.0	1.0	0.0	0.0	0.0	0.0	0.0	41.0	0.0	0.0	0.0	0.0	0.0	0.0	0.0	0.0	0.0	0.0	0.0	0.0	0.0	0.0	0.0	0.0	19.0	1.0	0.0	0.0	0.0	0.0	0.0	20.0	0.0	0.0	0.0	0.0	0.0	0.0	0.0	0.0
08:45 - 09:00	38.0	1.0	0.0	0.0	0.0	0.0	0.0	39.0	0.0	0.0	0.0	0.0	0.0	0.0	0.0	0.0	0.0	0.0	0.0	0.0	0.0	0.0	0.0	0.0	19.0	1.0	0.0	0.0	0.0	0.0	0.0	20.0	0.0	0.0	0.0	0.0	0.0	0.0	0.0	0.0
Hourly Total	161.0	4.0	0.0	0.0	0.0	0.0	0.0	165.0	0.0	0.0	0.0	0.0	0.0	0.0	0.0	0.0	0.0	0.0	0.0	0.0	0.0	0.0	0.0	0.0	90.0	6.0	1.0	0.0	0.0	0.0	0.0	98.0	0.0	0.0	0.0	0.0	0.0	0.0	0.0	0.0
09:00 - 09:15	40.0	1.0	1.0	2.0	0.0	0.0	0.0	45.0	0.0	0.0	0.0	0.0	0.0	0.0	0.0	0.0	0.0	0.0	0.0	0.0	0.0	0.0	0.0	0.0	15.0	1.0	0.0	0.0	0.0	0.0	0.0	16.0	0.0	0.0	0.0	0.0	0.0	0.0	0.0	0.0
09:15 - 09:30	35.0	1.0	0.0	0.0	0.0	0.0	0.0	36.0	0.0	0.0	0.0	0.0	0.0	0.0	0.0	0.0	0.0	0.0	0.0	0.0	0.0	0.0	0.0	0.0	14.0	1.0	1.0	0.0	0.0	0.0	0.0	16.0	0.0	0.0	0.0	0.0	0.0	0.0	0.0	0.0
09:30 - 09:45	33.0	1.0	0.0	0.0	0.0	0.0	0.0	34.0	0.0	0.0	0.0	0.0

advanced transport research

Job Number & Name: 8551 Barton Road, Havant

Site Number/Name: Site 2 - Barton Road/B2149 Peterfield Road

Client: C & A Consulting Engineers

Date: 11/06/2015

Weather:

Comments:

Advanced Transport Research	*Job Number & Name:*	**8551 Barton Road, Havant**
Site 2 - Barton Road/B2149 Peterfield Road	*Client:*	**C & A Consulting Engineers**
Site Plan	*Date:*	**Thursday 11 Jun 2015**

Advanced Transport Research	Job Number & Name:	8551 Barton Road, Havant
Site 2 - Barton Road/B2149 Peterfield Road	Client:	C & A Consulting Engineers
Queue Lengths	Date:	Thursday 11 June 2015

	B2149 Peterfield Road NB		Barton Road		B2149 Peterfield Road SB	
Times	Lane 1	Lane 2	Lane 1	Lane 2	Lane 1	Lane 2
07:00 - 07:05	1	4	8	2	1	4
07:05 - 07:10	2	6	6	3	4	3
07:10 - 07:15	0	7	5	2	3	2
07:15 - 07:20	1	5	5	2	1	3
07:20 - 07:25	0	7	6	3	3	4
07:25 - 07:30	1	5	3	2	2	1
07:30 - 07:35	1	10	4	4	3	7
07:35 - 07:40	1	8	12	6	2	17
07:40 - 07:45	2	7	6	3	4	6
07:45 - 07:50	2	10	4	4	4	11
07:50 - 07:55	0	8	3	2	3	12
07:55 - 08:00	2	9	7	3	4	10
08:00 - 08:05	0	7	5	3	3	6
08:05 - 08:10	1	15	6	3	3	14
08:10 - 08:15	1	6	9	5	4	18
08:15 - 08:20	2	13	9	4	3	22
08:20 - 08:25	2	12	11	5	3	14
08:25 - 08:30	2	12	11	3	1	19
08:30 - 08:35	0	9	6	4	7	18
08:35 - 08:40	0	12	10	5	2	5
08:40 - 08:45	1	6	10	3	2	8
08:45 - 08:50	0	10	6	5	2	8
08:50 - 08:55	5	9	11	6	3	7
08:55 - 09:00	3	6	4	5	4	10
09:00 - 09:05	1	7	9	3	2	12
09:05 - 09:10	1	13	4	5	1	12
09:10 - 09:15	2	10	5	2	1	9
09:15 - 09:20	2	5	6	2	1	5
09:20 - 09:25	1	9	7	1	2	6
09:25 - 09:30	1	4	5	0	3	5
09:30 - 09:35	0	13	4	2	1	4
09:35 - 09:40	2	13	6	3	2	6
09:40 - 09:45	1	11	2	2	1	9
09:45 - 09:50	1	11	6	3	2	6
09:50 - 09:55	1	10	6	1	1	6
09:55 - 10:00	1	7	10	4	1	6

Count in Vehicles

Lane 1 = Nearest Kerb

Advanced Transport Research	Job Number & Name:	8551 Barton Road, Havant
Site 2 - Barton Road/B2149 Peterfield Road	Client:	C & A Consulting Engineers
Queue Lengths	Date:	Thursday 11 June 2015

	B2149 Peterfield Road NB		Barton Road		B2149 Peterfield Road SB	
Times	Lane 1	Lane 2	Lane 1	Lane 2	Lane 1	Lane 2
16:00 - 16:05	2	9	4	2	5	5
16:05 - 16:10	4	16	18	4	5	12
16:10 - 16:15	1	17	6	4	3	13
16:15 - 16:20	2	11	14	5	3	14
16:20 - 16:25	1	13	11	4	3	6
16:25 - 16:30	0	10	10	2	2	7
16:30 - 16:35	4	10	13	3	2	9
16:35 - 16:40	1	14	8	3	2	6
16:40 - 16:45	3	9	7	5	1	6
16:45 - 16:50	2	12	12	7	1	11
16:50 - 16:55	2	11	14	3	5	5
16:55 - 17:00	1	7	6	4	2	7
17:00 - 17:05	1	11	4	5	2	10
17:05 - 17:10	1	9	10	7	3	5
17:10 - 17:15	3	11	6	5	1	14
17:15 - 17:20	1	10	10	4	2	7
17:20 - 17:25	0	8	18	5	3	7
17:25 - 17:30	2	7	8	2	3	8
17:30 - 17:35	3	7	7	2	0	4
17:35 - 17:40	2	8	11	4	2	8
17:40 - 17:45	1	11	5	4	1	9
17:45 - 17:50	3	8	11	4	4	4
17:50 - 17:55	1	8	7	2	2	6
17:55 - 18:00	3	7	6	2	1	5
18:00 - 18:05	2	9	8	4	4	8
18:05 - 18:10	0	6	7	2	3	6
18:10 - 18:15	2	11	5	3	1	7
18:15 - 18:20	2	8	6	2	2	7
18:20 - 18:25	3	5	4	2	2	6
18:25 - 18:30	0	12	5	5	3	8
18:30 - 18:35	1	11	8	1	1	6
18:35 - 18:40	3	5	7	1	1	4
18:40 - 18:45	2	7	3	1	2	8
18:45 - 18:50	0	7	4	2	2	4
18:50 - 18:55	1	5	6	2	2	6
18:55 - 19:00	2	5	6	2	1	4

advanced transport research

Job Number & Name: 8551 Barton Road, Havant

Site Number/Name: Site 2 - Barton Road/B2149 Petersfield Road

Client: C & A Consulting Engineers

Date: 11/06/2015

Weather:

Comments:

Advanced Transport Research	*Job Number & Name:*	**8551 Barton Road, Havant**
Site 2 - Barton Road/B2149 Petersfield Road	*Client:*	**C & A Consulting Engineers**
Site Plan	*Date:*	**Thursday 11 Jun 2015**

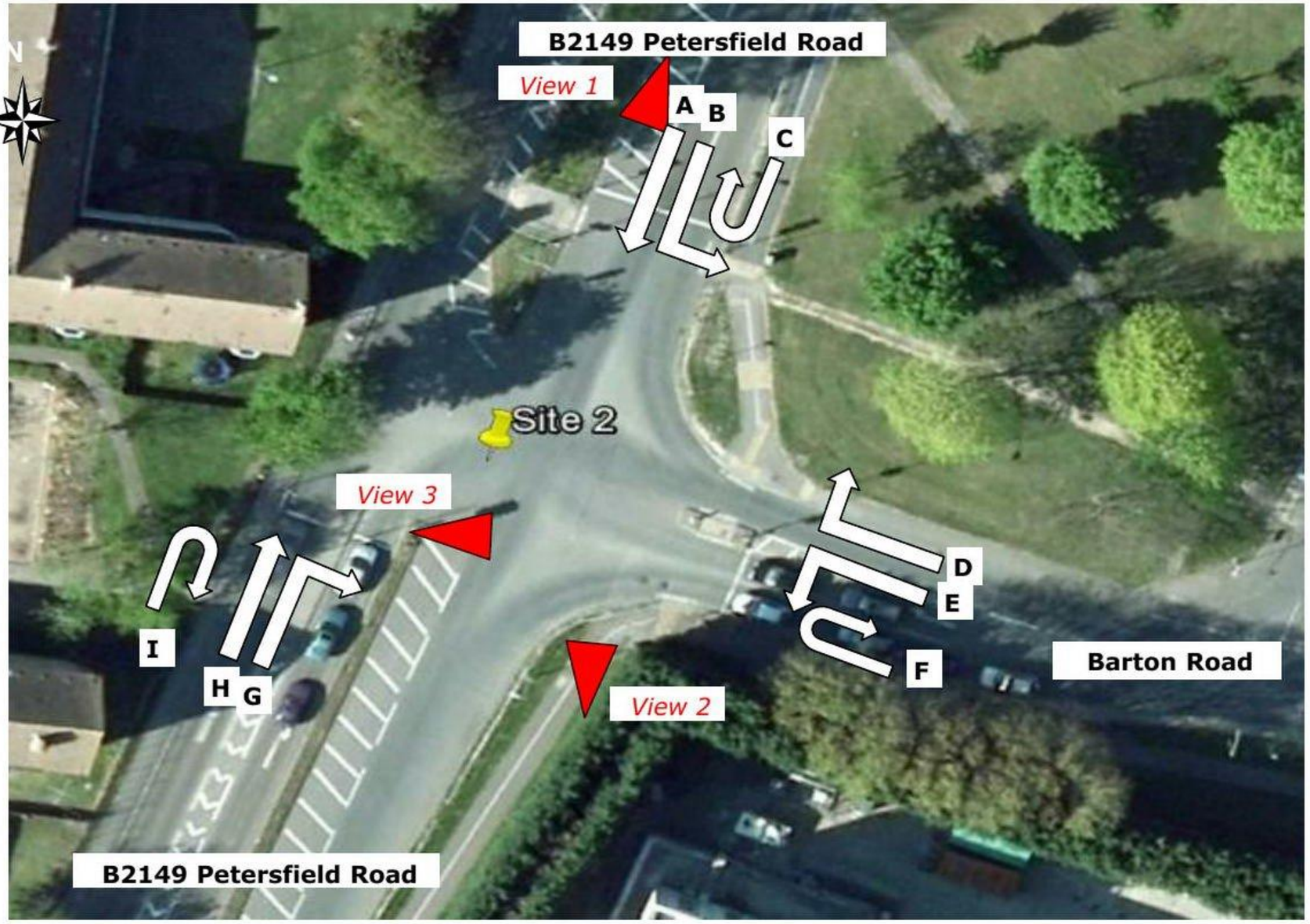

Advanced Transport Research	*Job Number & Name:*	**8551 Barton Road, Ha**
Site 2 - Barton Road/B2149 Petersfield Road	*Client:*	**C & A Consulting Engi**
Flow Diagram	*Date:*	**Thursday 11 Jun 2015**

Select Period **07:00**

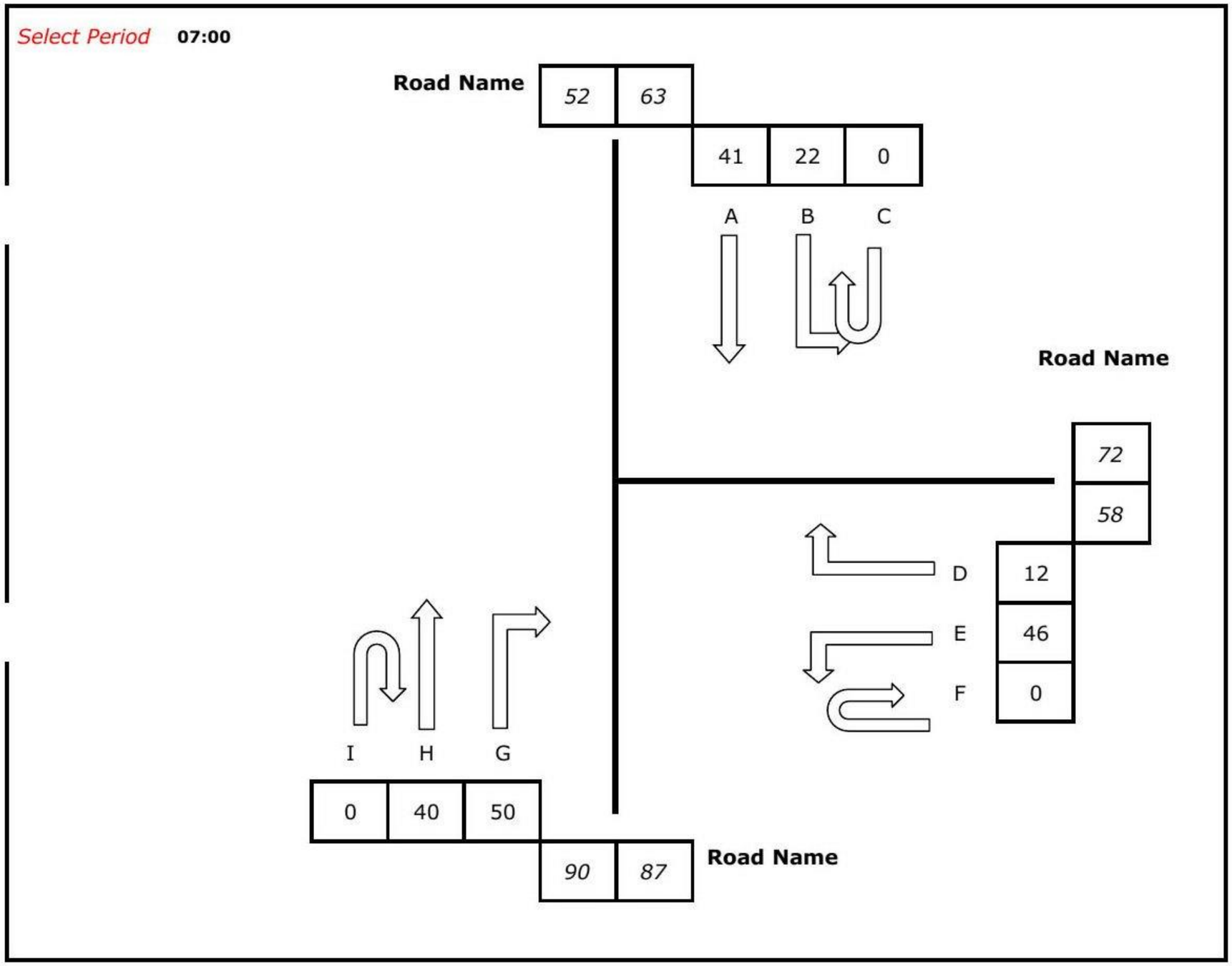

Advanced Transport Research
Site 2 - Barton Road/B2149 Petersfield Road
Classified Counts

Job Number & Name: 8551 Bartc
Client: C & A Cons
Date: Thursday 11

Times	Movement A							Movement B							Movement C							Movement D							Movement E							Movement F							Movement G							Movement H								
	Cars	LGV	OGV 1	OGV 2	PSV	M/B	Cyc	Cars	LGV	OGV 1	OGV 2	PSV	M/B	Cyc	Cars	LGV	OGV 1	OGV 2	PSV	M/B	Cyc	Cars	LGV	OGV 1	OGV 2	PSV	M/B	Cyc	Cars	LGV	OGV 1	OGV 2	PSV	M/B	Cyc	Cars	LGV	OGV 1	OGV 2	PSV	M/B	Cyc	Cars	LGV	OGV 1	OGV 2	PSV	M/B	Cyc	Cars	LGV	OGV 1	OGV 2	PSV	M/B	Cyc	Cars	LGV
07:00 - 07:15	34	4	1	1	0	1	0	12	9	1	0	0	0	0	0	0	0	0	0	0	0	4	2	5	0	0	1	0	32	9	4	0	0	1	0	0	0	0	0	0	0	0	31	15	0	1	0	3	0	32	6	2	0	0	0	0	0	0
07:15 - 07:30	49	8	1	0	0	0	2	21	4	1	0	0	0	0	0	0	0	0	0	0	0	8	5	4	0	0	0	0	37	1	0	0	1	2	1	0	0	0	0	0	0	0	34	9	3	0	0	1	0	26	5	3	1	0	1	0	0	0
07:30 - 07:45	68	9	5	1	0	1	3	23	9	3	1	0	2	0	0	0	0	0	0	0	0	18	1	2	0	1	0	1	50	8	4	1	0	1	0	0	0	0	0	0	0	0	59	15	1	0	0	2	0	56	6	4	1	0	1	1	0	0
07:45 - 08:00	71	6	5	0	1	0	1	31	4	0	0	0	0	0	0	0	0	0	0	0	0	24	1	1	0	0	0	1	58	11	0	0	0	0	0	0	0	0	0	0	0	0	61	17	3	1	0	0	1	42	6	4	0	0	0	1	0	0
Hourly Total	**222**	**27**	**12**	**2**	**1**	**2**	**6**	**87**	**26**	**5**	**1**	**0**	**2**	**0**	**0**	**0**	**0**	**0**	**0**	**0**	**0**	**54**	**9**	**12**	**0**	**1**	**1**	**2**	**177**	**29**	**8**	**1**	**1**	**4**	**1**	**0**	**0**	**0**	**0**	**0**	**0**	**0**	**185**	**56**	**7**	**2**	**0**	**6**	**1**	**156**	**23**	**13**	**2**	**0**	**2**	**2**	**0**	**0**
08:00 - 08:15	86	3	4	0	0	0	2	23	6	0	0	0	0	1	0	0	0	0	0	0	0	20	2	1	0	0	0	0	69	8	3	1	0	1	1	0	0	0	0	0	0	0	80	9	3	1	0	1	0	60	7	1	0	0	0	0	0	0
08:15 - 08:30	121	8	5	0	0	1	0	23	4	1	0	0	1	0	0	0	0	0	0	0	0	18	7	0	2	0	0	0	79	7	4	1	1	1	0	0	0	0	0	0	0	0	94	10	4	2	0	1	0	60	7	3	0	0	0	0	0	0
08:30 - 08:45	85	5	2	0	0	0	0	29	2	1	0	0	0	0	0	0	0	0	0	0	0	22	6	4	0	0	0	1	74	5	0	2	0	2	0	0	0	0	0	0	0	0	64	10	1	0	0	1	1	52	8	2	1	0	0	1	0	0
08:45 - 09:00	81	9	2	0	0	1	0	31	1	1	0	0	0	0	0	0	0	0	0	0	0	24	8	1	1	0	0	0	59	3	2	0	1	0	0	0	0	0	0	0	0	0	69	9	3	4	1	0	0	67	8	1	0	0	2	0	0	0
Hourly Total	**375**	**25**	**13**	**0**	**0**	**2**	**2**	**106**	**13**	**3**	**0**	**0**	**1**	**1**	**0**	**0**	**0**	**0**	**0**	**0**	**0**	**84**	**23**	**6**	**3**	**0**	**0**	**1**	**281**	**23**	**9**	**4**	**2**	**4**	**1**	**0**	**0**	**0**	**0**	**0**	**0**	**0**	**307**	**38**	**11**	**7**	**1**	**3**	**1**	**239**	**30**	**7**	**1**	**0**	**2**	**1**	**0**	**0**
09:00 - 09:15	77	8	2	1	0	1	0	22	4	1	0	0	1	0	0	0	0	0	0	0	0	19	6	0	0	0	0	0	82	8	1	3	0	1	0	0	0	0	0	0	0	0	66	7	0	3	0	0	0	57	3	2	1	0	0	1	0	0
09:15 - 09:30	59	6	2	0	0	0	1	15	4	1	1	0	0	1	0	0	0	0	0	0	0	6	1	0	0	0	0	0	58	7	2	3	0	0	0	0	0	0	0	0	0	0	50	11	1	0	0	0	0	36	6	2	0	0	1	1	0	0
09:30 - 09:45	51	1	1	0	0	1	1	16	3	1	1	0	0	0	0	0	0	0	0	0	0	8	3	0	0	0	0	0	60	10	0	1	0	1	0	0	0	0	0	0	0	0	75	7	2	2	0	1	0	54	8	2	3	0	0	0	0	0
09:45 - 10:00	66	3	2	0	0	0	0	10	4	1	0	0	0	0	0	0	0	0	0	0	0	10	4	1	0	0	0	0	59	8	4	2	0	2	0	0	0	0	0	0	0	0	67	8	1	2	0	0	0	50	6	0	0	0	0	0	0	0
Hourly Total	**253**	**18**	**7**	**1**	**0**	**2**	**2**	**63**	**15**	**4**	**2**	**0**	**1**	**1**	**0**	**0**	**0**	**0**	**0**	**0**	**0**	**43**	**14**	**1**	**0**	**0**	**0**	**0**	**259**	**33**	**7**	**9**	**0**	**4**	**0**	**0**	**0**	**0**	**0**	**0**	**0**	**0**	**258**	**33**	**4**	**7**	**0**	**1**	**0**	**197**	**23**	**6**	**4**	**0**	**1**	**2**	**0**	**0**
16:00 - 16:15	70	6	5	0	0	0	0	20	4	3	1	1	0	0	0	0	0	0	0	0	0	24	7	0	0	0	0	0	74	11	4	2	0	0	0	0	0	0	0	0	0	0	83	12	2	1	0	0	0	78	10	0	0	0	1	0	0	0
16:15 - 16:30	52	9	3	0	0	2	1	21	4	3	0	0	0	0	0	0	0	0	0	0	0	25	8	0	2	0	1	0	85	15	4	6	0	4	0	0	0	0	0	0	0	0	75	12	2	0	0	4	0	79	4	6	0	0	1	1	0	0
16:30 - 16:45	79	8	3	0	0	1	0	13	4	0	0	1	0	0	0	0	0	0	0	0	0	23	2	0	0	0	2	0	90	12	3	1	0	5	0	0	0	0	0	0	0	0	74	9	4	0	0	1	3	97	11	4	0	0	5	0	0	0
16:45 - 17:00	68	6	3	1	0	4	0	15	2	2	0	0	0	0	0	0	0	0	0	0	0	27	6	1	0	0	0	2	80	29	2	0	0	0	0	0	0	0	0	0	0	0	76	15	2	0	0	0	1	88	15	1	1	0	4	3	0	0
Hourly Total	**269**	**29**	**14**	**1**	**0**	**7**	**1**	**69**	**14**	**8**	**1**	**2**	**0**	**0**	**0**	**0**	**0**	**0**	**0**	**0**	**0**	**99**	**23**	**1**	**2**	**0**	**3**	**2**	**329**	**67**	**13**	**9**	**0**	**9**	**0**	**0**	**0**	**0**	**0**	**0**	**0**	**0**	**308**	**48**	**10**	**1**	**0**	**5**	**4**	**342**	**40**	**11**	**1**	**0**	**11**	**4**	**0**	**0**
17:00 - 17:15	61	7	2	0	0	3	0	19	2	2	0	0	0	0	0	0	0	0	0	0	0	38	9	1	0	0	1	1	91	6	3	0	0	1	0	0	0	0	0	0	0	0	73	11	0	0	0	1	0	116	7	2	0	0	2	2	0	0
17:15 - 17:30	61	7	2	0	0	1	0	22	4	0	0	0	0	0	0	0	0	0	0	0	0	28	6	1	0	0	0	0	110	10	2	0	0	3	1	0	0	0	0	0	0	0	71	10	2	0	0	2	0	82	7	0	0	0	1	4	0	0
17:30 - 17:45	77	5	1	0	0	0	1	14	3	0	0	0	0	0	0	0	0	0	0	0	0	28	2	0	0	0	0	1	90	7	1	0	0	4	1	0	0	0	0	0	0	0	70	6	2	0	0	1	0	100	9	0	0	0	4	1	0	0
17:45 - 18:00	57	5	0	0	0	1	1	17	7	1	0	0	1	0	0	0	0	0	0	0	0	18	6	0	0	0	2	0	97	5	0	0	0	2	0	0	0	0	0	0	0	0	69	8	0	0	0	1	1	100	4	1	0	0	1	0	0	0
Hourly Total	**256**	**24**	**5**	**0**	**0**	**5**	**2**	**72**	**16**	**3**	**0**	**0**	**1**	**0**	**0**	**0**	**0**	**0**	**0**	**0**	**0**	**112**	**23**	**2**	**0**	**0**	**3**	**2**	**388**	**28**	**6**	**0**	**0**	**10**	**2**	**0**	**0**	**0**	**0**	**0**	**0**	**0**	**283**	**35**	**4**	**0**	**0**	**5**	**1**	**398**	**27**	**3**	**0**	**0**	**8**	**7**	**0**	**0**
18:00 - 18:15	66	8	1	1	0	2	0	17	3	1	0	0	0	0	0	0	0	0	0	0	0	21	2	0	0	0	0	2	84	8	1	0	0	0	0	0	0	0	0	0	0	0	64	6	1	0	0	2	0	83	4	2	0	0	0	2	0	0
18:15 - 18:30	63	1	0	0	0	1	0	18	4	0	0	0	0	0	0	0	0	0	0	0	0	21	4	0	0	0	0	1	71	6	1	0	0	0	0	0	0	0	0	0	0	0	64	7	2	0	0	0	1	89	6	0	0	0	2	3	0	0
18:30 - 18:45	67	3	1	0	0	2	0	16	3	0	0	0	1	0	0	0	0	0	0	0	0	6	4	0	0	0	1	0	67	8	1	0	0	0	2	0	0	0	0	0	0	0	65	3	0	0	0	0	0	65	4	1	0	0	1	0	0	0
18:45 - 19:00	59	7	1	0	0	3	2	14	1	1	0	0	0	0	0	0	0	0	0	0	0	17	4	0	0	0	0	0	66	4	0	0	0	0	1	0	0	0	0	0	0	0	49	6	1	0	0	0	0	62	3	0	0	0	0	0	0	0
Hourly Total	**255**	**19**	**3**	**1**	**0**	**8**	**2**	**65**	**11**	**2**	**0**	**0**	**1**	**0**	**0**	**0**	**0**	**0**	**0**	**0**	**0**	**65**	**14**	**0**	**0**	**0**	**1**	**3**	**288**	**26**	**3**	**0**	**0**	**0**	**3**	**0**	**0**	**0**	**0**	**0**	**0**	**0**	**242**	**22**	**4**	**0**	**0**	**2**	**1**	**299**	**17**	**3**	**0**	**0**	**3**	**5**	**0**	**0**

on Road, Havant
ulting Engineers
June 2015

Movement I

OGV 1	OGV 2	PSV	M/B	Cyc
0	0	0	0	0
0	0	0	0	0
0	0	0	0	0
0	0	0	0	0
0	**0**	**0**	**0**	**0**
0	0	0	0	0
0	0	0	0	0
0	0	0	0	0
0	0	0	0	0
0	**0**	**0**	**0**	**0**
0	0	0	0	0
0	0	0	0	0
0	0	0	0	0
0	0	0	0	0
0	**0**	**0**	**0**	**0**

0	0	0	0	0
0	0	0	0	0
0	0	0	0	0
0	0	0	0	0
0	**0**	**0**	**0**	**0**
0	0	0	0	0
0	0	0	0	0
0	0	0	0	0
0	0	0	0	0
0	**0**	**0**	**0**	**0**
0	0	0	0	0
0	0	0	0	0
0	0	0	0	0
0	0	0	0	0
0	**0**	**0**	**0**	**0**

Advanced Transport Research

Site 2 - Barton Road/B2149 Petersfield Road

PCU Values

Job Number & Name	8551 Barton Road, Havant
Client	C & A Consulting Engineers
Date	Thursday 11 June 2015

Times	Movement A								Movement B								Movement C								Movement D							
	Cars	LGV	OGV 1	OGV 2	PSV	M/B	Cyc	Total	Cars	LGV	OGV 1	OGV 2	PSV	M/B	Cyc	Total	Cars	LGV	OGV 1	OGV 2	PSV	M/B	Cyc	Total	Cars	LGV	OGV 1	OGV 2	PSV	M/B	Cyc	Total
07:00 - 07:15	85.0	0.0	7.0	2.0	3.0	0.0	0.0	97.0	12.0	0.0	1.0	0.0	0.0	0.0	0.0	13.0	0.0	0.0	0.0	0.0	0.0	0.0	0.0	0.0	0.0	2.0	1.0	0.0	0.0	0.0	0.0	3.0
07:15 - 07:30	99.0	0.0	7.0	0.0	3.0	0.0	0.0	109.0	21.0	0.0	1.0	0.0	0.0	0.0	0.0	22.0	0.0	0.0	0.0	0.0	0.0	0.0	0.0	0.0	0.0	0.0	0.0	0.0	0.0	0.0	0.0	0.0
07:30 - 07:45	98.0	0.0	7.0	0.0	3.0	0.0	0.0	108.0	23.0	0.0	4.0	2.0	0.0	0.0	0.0	29.0	0.0	0.0	0.0	0.0	0.0	0.0	0.0	0.0	18.0	1.0	1.0	0.0	0.0	0.0	0.0	20.0
07:45 - 08:00	71.0	0.0	7.0	0.0	2.0	0.0	0.0	80.0	21.0	0.0	0.0	0.0	0.0	0.0	0.0	21.0	0.0	0.0	0.0	0.0	0.0	0.0	0.0	0.0	24.0	1.0	1.0	0.0	0.0	0.0	0.0	26.0
Hourly Total	353.0	0.0	28.0	0.0	11.0	0.0	0.0	392.0	77.0	0.0	6.0	2.0	0.0	0.0	0.0	85.0	0.0	0.0	0.0	0.0	0.0	0.0	0.0	0.0	42.0	4.0	3.0	0.0	0.0	0.0	0.0	49.0
08:00 - 08:15	88.0	0.0	8.0	0.0	3.0	0.0	0.0	99.0	23.0	0.0	0.0	0.0	0.0	0.0	0.0	23.0	0.0	0.0	0.0	0.0	0.0	0.0	0.0	0.0	19.0	2.0	1.0	0.0	0.0	0.0	0.0	22.0
08:15 - 08:30	123.0	0.0	7.0	0.0	3.0	0.0	0.0	133.0	23.0	0.0	1.0	0.0	0.0	0.0	0.0	24.0	0.0	0.0	0.0	0.0	0.0	0.0	0.0	0.0	19.0	7.0	0.0	0.0	0.0	0.0	0.0	26.0
08:30 - 08:45	85.0	0.0	5.0	0.0	3.0	0.0	0.0	93.0	29.0	0.0	1.0	0.0	0.0	0.0	0.0	30.0	0.0	0.0	0.0	0.0	0.0	0.0	0.0	0.0	22.0	8.0	0.0	0.0	0.0	0.0	0.0	30.0
08:45 - 09:00	81.0	0.0	5.0	0.0	3.0	0.0	0.0	89.0	31.0	1.0	1.0	0.0	0.0	0.0	0.0	33.0	0.0	0.0	0.0	0.0	0.0	0.0	0.0	0.0	24.0	8.0	1.0	0.0	0.0	0.0	0.0	33.0
Hourly Total	376.0	0.0	25.0	0.0	9.0	0.0	0.0	410.0	106.0	1.0	3.0	0.0	0.0	0.0	0.0	110.0	0.0	0.0	0.0	0.0	0.0	0.0	0.0	0.0	84.0	25.0	2.0	0.0	0.0	0.0	0.0	111.0
09:00 - 09:15	77.0	0.0	3.0	0.0	3.0	0.0	0.0	83.0	32.0	0.0	1.0	0.0	0.0	0.0	0.0	33.0	0.0	0.0	0.0	0.0	0.0	0.0	0.0	0.0	19.0	6.0	0.0	0.0	0.0	0.0	0.0	25.0
09:15 - 09:30	69.0	0.0	3.0	0.0	3.0	0.0	0.0	75.0	15.0	0.0	1.0	0.0	0.0	0.0	0.0	16.0	0.0	0.0	0.0	0.0	0.0	0.0	0.0	0.0	6.0	1.0	0.0	0.0	0.0	0.0	0.0	7.0
09:30 - 09:45	81.0	1.0	1.0	0.0	3.0	0.0	0.0	86.0	19.0	0.0	1.0	0.0	0.0	0.0	0.0	20.0	0.0	0.0	0.0	0.0	0.0	0.0	0.0	0.0	8.0	1.0	0.0	0.0	0.0	0.0	0.0	9.0
09:45 - 10:00	86.0	0.0	3.0	0.0	0.0	0.0	0.0	89.0	18.0	0.0	0.0	0.0	0.0	0.0	0.0	18.0	0.0	0.0	0.0	0.0	0.0	0.0	0.0	0.0	10.0	0.0	0.0	0.0	0.0	0.0	0.0	10.0
Hourly Total	313.0	1.0	10.0	0.0	9.0	0.0	0.0	333.0	84.0	0.0	3.0	0.0	0.0	0.0	0.0	87.0	0.0	0.0	0.0	0.0	0.0	0.0	0.0	0.0	43.0	8.0	0.0	0.0	0.0	0.0	0.0	51.0
10:00 - 10:15	75.0	0.0	7.0	0.0	3.0	0.0	0.0	85.0	18.0	0.0	4.0	2.0	0.0	0.0	0.0	24.0	0.0	0.0	0.0	0.0	0.0	0.0	0.0	0.0	14.0	7.0	0.0	0.0	0.0	0.0	0.0	21.0
10:15 - 10:30	92.0	0.0	4.0	0.0	3.0	0.0	0.0	99.0	21.0	0.0	4.0	0.0	0.0	0.0	0.0	25.0	0.0	0.0	0.0	0.0	0.0	0.0	0.0	0.0	18.0	8.0	0.0	0.0	0.0	0.0	0.0	26.0
10:30 - 10:45	79.0	0.0	4.0	0.0	3.0	0.0	0.0	91.0	13.0	0.0	0.0	2.0	0.0	0.0	0.0	15.0	0.0	0.0	0.0	0.0	0.0	0.0	0.0	0.0	13.0	9.0	0.0	0.0	0.0	0.0	0.0	22.0
10:45 - 11:00	68.0	0.0	4.0	0.0	3.0	1.0	0.0	80.0	18.0	0.0	1.0	0.0	0.0	0.0	0.0	20.0	0.0	0.0	0.0	0.0	0.0	0.0	0.0	0.0	17.0	4.0	1.0	0.0	0.0	0.0	0.0	22.0
Hourly Total	314.0	0.0	19.0	0.0	12.0	1.0	0.0	346.0	70.0	0.0	9.0	4.0	0.0	0.0	0.0	84.0	0.0	0.0	0.0	0.0	0.0	0.0	0.0	0.0	62.0	28.0	1.0	0.0	0.0	0.0	0.0	91.0
11:00 - 11:15	78.0	0.0	4.0	0.0	3.0	0.0	0.0	85.0	21.0	0.0	4.0	0.0	0.0	0.0	0.0	25.0	0.0	0.0	0.0	0.0	0.0	0.0	0.0	0.0	18.0	8.0	0.0	0.0	0.0	0.0	0.0	26.0
11:15 - 11:30	92.0	0.0	4.0	0.0	3.0	0.0	0.0	99.0	21.0	0.0	4.0	0.0	0.0	0.0	0.0	25.0	0.0	0.0	0.0	0.0	0.0	0.0	0.0	0.0	18.0	8.0	0.0	0.0	0.0	0.0	0.0	26.0
11:30 - 11:45	79.0	0.0	4.0	0.0	3.0	0.0	0.0	91.0	13.0	0.0	0.0	2.0	0.0	0.0	0.0	15.0	0.0	0.0	0.0	0.0	0.0	0.0	0.0	0.0	13.0	9.0	0.0	0.0	0.0	0.0	0.0	22.0
11:45 - 12:00	68.0	0.0	4.0	0.0	3.0	1.0	0.0	80.0	18.0	0.0	1.0	0.0	0.0	0.0	0.0	20.0	0.0	0.0	0.0	0.0	0.0	0.0	0.0	0.0	17.0	4.0	1.0	0.0	0.0	0.0	0.0	22.0
Hourly Total	317.0	0.0	16.0	0.0	12.0	1.0	0.0	346.0	73.0	0.0	9.0	2.0	0.0	0.0	0.0	85.0	0.0	0.0	0.0	0.0	0.0	0.0	0.0	0.0	66.0	29.0	1.0	0.0	0.0	0.0	0.0	96.0
12:00 - 12:15	77.0	0.0	1.0	0.0	3.0	0.0	0.0	81.0	14.0	0.0	0.0	0.0	0.0	0.0	0.0	14.0	0.0	0.0	0.0	0.0	0.0	0.0	0.0	0.0	20.0	2.0	0.0	0.0	0.0	0.0	0.0	22.0
12:15 - 12:30	87.0	0.0	0.0	0.0	3.0	0.0	0.0	90.0	17.0	0.0	1.0	0.0	0.0	0.0	0.0	18.0	0.0	0.0	0.0	0.0	0.0	0.0	0.0	0.0	20.0	2.0	0.0	0.0	0.0	0.0	0.0	22.0
12:30 - 12:45	87.0	0.0	0.0	0.0	3.0	0.0	0.0	90.0	17.0	0.0	1.0	0.0	0.0	0.0	0.0	18.0	0.0	0.0	0.0	0.0	0.0	0.0	0.0	0.0	20.0	2.0	0.0	0.0	0.0	0.0	0.0	22.0
12:45 - 13:00	87.0	0.0	0.0	0.0	3.0	0.0	0.0	90.0	17.0	0.0	1.0	0.0	0.0	0.0	0.0	18.0	0.0	0.0	0.0	0.0	0.0	0.0	0.0	0.0	20.0	2.0	0.0	0.0	0.0	0.0	0.0	22.0
Hourly Total	348.0	0.0	1.0	0.0	12.0	0.0	0.0	361.0	65.0	0.0	4.0	0.0	0.0	0.0	0.0	69.0	0.0	0.0	0.0	0.0	0.0	0.0	0.0	0.0	80.0	8.0	0.0	0.0	0.0	0.0	0.0	88.0
13:00 - 13:15	86.0	0.0	1.0	2.0	3.0	0.0	0.0	92.0	17.0	0.0	1.0	0.0	0.0	0.0	0.0	18.0	0.0	0.0	0.0	0.0	0.0	0.0	0.0	0.0	20.0	2.0	0.0	0.0	0.0	0.0	0.0	22.0
13:15 - 13:30	93.0	1.0	0.0	0.0	3.0	0.0	0.0	98.0	18.0	0.0	0.0	0.0	0.0	0.0	0.0	18.0	0.0	0.0	0.0	0.0	0.0	0.0	0.0	0.0	20.0	2.0	0.0	0.0	0.0	0.0	0.0	22.0
13:30 - 13:45	87.0	0.0	0.0	0.0	3.0	0.0	0.0	90.0	18.0	0.0	0.0	0.0	0.0	0.0	0.0	18.0	0.0	0.0	0.0	0.0	0.0	0.0	0.0	0.0	20.0	2.0	0.0	0.0	0.0	0.0	0.0	22.0
13:45 - 14:00	86.0	0.0	1.0	0.0	3.0	1.0	0.0	91.0	18.0	0.0	1.0	0.0	0.0	0.0	0.0	19.0	0.0	0.0	0.0	0.0	0.0	0.0	0.0	0.0	20.0	2.0	0.0	0.0	0.0	0.0	0.0	22.0
Hourly Total	352.0	1.0	2.0	2.0	12.0	1.0	0.0	371.0	71.0	0.0	2.0	0.0	0.0	0.0	0.0	73.0	0.0	0.0	0.0	0.0	0.0	0.0	0.0	0.0	80.0	8.0	0.0	0.0	0.0	0.0	0.0	88.0
14:00 - 14:15	86.0	0.0	1.0	2.0	3.0	0.0	0.0	92.0	18.0	0.0	1.0	0.0	0.0	0.0	0.0	19.0	0.0	0.0	0.0	0.0	0.0	0.0	0.0	0.0	20.0	2.0	0.0	0.0	0.0	0.0	0.0	22.0
14:15 - 14:30	93.0	1.0	0.0	0.0	3.0	0.0	0.0	98.0	18.0	0.0	0.0	0.0	0.0	0.0	0.0	18.0	0.0	0.0	0.0	0.0	0.0	0.0	0.0	0.0	20.0	2.0	0.0	0.0	0.0	0.0	0.0	22.0
14:30 - 14:45	87.0	0.0	0.0	0.0	3.0	0.0	0.0	90.0	18.0	0.0	0.0	0.0	0.0	0.0	0.0	18.0	0.0	0.0	0.0	0.0	0.0	0.0	0.0	0.0	20.0	2.0	0.0	0.0	0.0	0.0	0.0	22.0
14:45 - 15:00	86.0	0.0	1.0	0.0	3.0	0.0	0.0	90.0	18.0	0.0	1.0	0.0	0.0	0.0	0.0	19.0	0.0	0.0	0.0	0.0	0.0	0.0	0.0	0.0	20.0	2.0	0.0	0.0	0.0	0.0	0.0	22.0
Hourly Total	352.0	1.0	2.0	0.0	12.0	0.0	0.0	367.0	72.0	0.0	2.0	0.0	0.0	0.0	0.0	74.0	0.0	0.0	0.0	0.0	0.0	0.0	0.0	0.0	80.0	8.0	0.0	0.0	0.0	0.0	0.0	88.0
15:00 - 15:15	86.0	0.0	1.0	2.0	3.0	0.0	0.0	92.0	18.0	0.0	1.0	0.0	0.0	0.0	0.0	19.0	0.0	0.0	0.0	0.0	0.0	0.0	0.0	0.0	20.0	2.0	0.0	0.0	0.0	0.0	0.0	22.0
15:15 - 15:30	93.0	1.0	0.0	0.0	3.0	0.0	0.0	98.0	18.0	0.0	0.0	0.0	0.0	0.0	0.0	18.0	0.0	0.0	0.0	0.0	0.0	0.0	0.0	0.0	20.0	2.0	0.0	0.0	0.0	0.0	0.0	22.0
15:30 - 15:45	87.0	0.0	0.0	0.0	3.0	0.0	0.0	90.0	18.0	0.0	0.0	0.0	0.0	0.0	0.0	18.0	0.0	0.0	0.0	0.0	0.0	0.0	0.0	0.0	20.0	2.0	0.0	0.0	0.0	0.0	0.0	22.0
15:45 - 16:00	86.0	0.0	1.0	0.0	3.0	0.0	0.0	90.0	18.0	0.0	1.0	0.0	0.0	0.0	0.0	19.0	0.0	0.0	0.0	0.0	0.0	0.0	0.0	0.0	20.0	2.0	0.0	0.0	0.0	0.0	0.0	22.0
Hourly Total	352.0	1.0	2.0	0.0	12.0	0.0	0.0	367.0	72.0	0.0	2.0	0.0	0.0	0.0	0.0	74.0	0.0	0.0	0.0	0.0	0.0	0.0	0.0	0.0	80.0	8.0	0.0	0.0	0.0	0.0	0.0	88.0
16:00 - 16:15	86.0	0.0	1.0	2.0	3.0	0.0	0.0	92.0	18.0	0.0	1.0	0.0	0.0	0.0	0.0	19.0	0.0	0.0	0.0	0.0	0.0	0.0	0.0	0.0	20.0	2.0	0.0	0.0	0.0	0.0	0.0	22.0
16:15 - 16:30	93.0	1.0	0.0	0.0	3.0	0.0	0.0	98.0	18.0	0.0	0.0	0.0	0.0	0.0	0.0	18.0	0.0	0.0	0.0	0.0	0.0	0.0	0.0	0.0	20.0	2.0	0.0	0.0	0.0	0.0	0.0	22.0
16:30 - 16:45	87.0	0.0	0.0	0.0	3.0	0.0	0.0	90.0	18.0	0.0	0.0	0.0	0.0	0.0	0.0	18.0	0.0	0.0	0.0	0.0	0.0	0.0	0.0	0.0	20.0	2.0	0.0	0.0	0.0	0.0	0.0	22.0
16:45 - 17:00	86.0	0.0	1.0	0.0	3.0	0.0	0.0	90.0	18.0	0.0	1.0	0.0	0.0	0.0	0.0	19.0	0.0	0.0	0.0	0.0	0.0	0.0	0.0	0.0	20.0	2.0	0.0	0.0	0.0	0.0	0.0	22.0
Hourly Total	352.0	1.0	2.0	2.0	12.0	0.0	0.0	370.0	72.0	0.0	2.0	0.0	0.0	0.0	0.0	74.0	0.0	0.0	0.0	0.0	0.0	0.0	0.0	0.0	80.0	8.0	0.0	0.0	0.0	0.0	0.0	88.0
17:00 - 17:15	86.0	0.0	1.0	2.0	3.0	0.0	0.0	92.0	18.0	0.0	1.0	0.0	0.0	0.0	0.0	19.0	0.0	0.0	0.0	0.0	0.0	0.0	0.0	0.0	20.0	2.0	0.0	0.0	0.0	0.0	0.0	22.0
17:15 - 17:30	93.0	1.0	0.0	0.0	3.0	0.0	0.0	98.0	18.0	0.0	0.0	0.0	0.0	0.0	0.0	18.0	0.0	0.0	0.0	0.0	0.0	0.0	0.0	0.0	20.0	2.0	0.0	0.0	0.0	0.0	0.0	22.0
17:30 - 17:45	87.0	0.0	0.0	0.0	3.0	0.0	0.0	90.0	18.0	0.0	0.0	0.0	0.0	0.0	0.0	18.0	0.0	0.0	0.0	0.0	0.0	0.0	0.0	0.0	20.0	2.0	0.0	0.0	0.0	0.0	0.0	22.0
17:45 - 18:00	86.0	0.0	1.0	0.0	3.0	0.0	0.0	90.0	18.0	0.0	1.0	0.0	0.0	0.0	0.0	19.0	0.0	0.0	0.0	0.0	0.0	0.0	0.0	0.0	20.0	2.0	0.0	0.0	0.0	0.0	0.0	22.0
Hourly Total	352.0	1.0	2.0	2.0	12.0	0.0	0.0	370.0	72.0	0.0	2.0	0.0	0.0	0.0	0.0	74.0	0.0	0.0	0.0	0.0	0.0	0.0	0.0	0.0	80.0	8.0	0.0	0.0	0.0	0.0	0.0	88.0

advanced transport research

Job Number & Name:	8551 Barton Road, Havant
Site Number/Name:	Site 1 - Barton Road/B2148 Comely Hill/Emsworth Common Road
Client:	C & A Consulting Engineers
Date:	11/06/2015
Weather:	
Comments:	

Advanced Transport Research	*Job Number & Name:*	**8551 Barton Road, Havant**
Site 1 - Barton Road/B2148 Comely Hill/Emsworth Comr	*Client:*	**C & A Consulting Engineers**
Site Plan	*Date:*	**Thursday 11 Jun 2015**

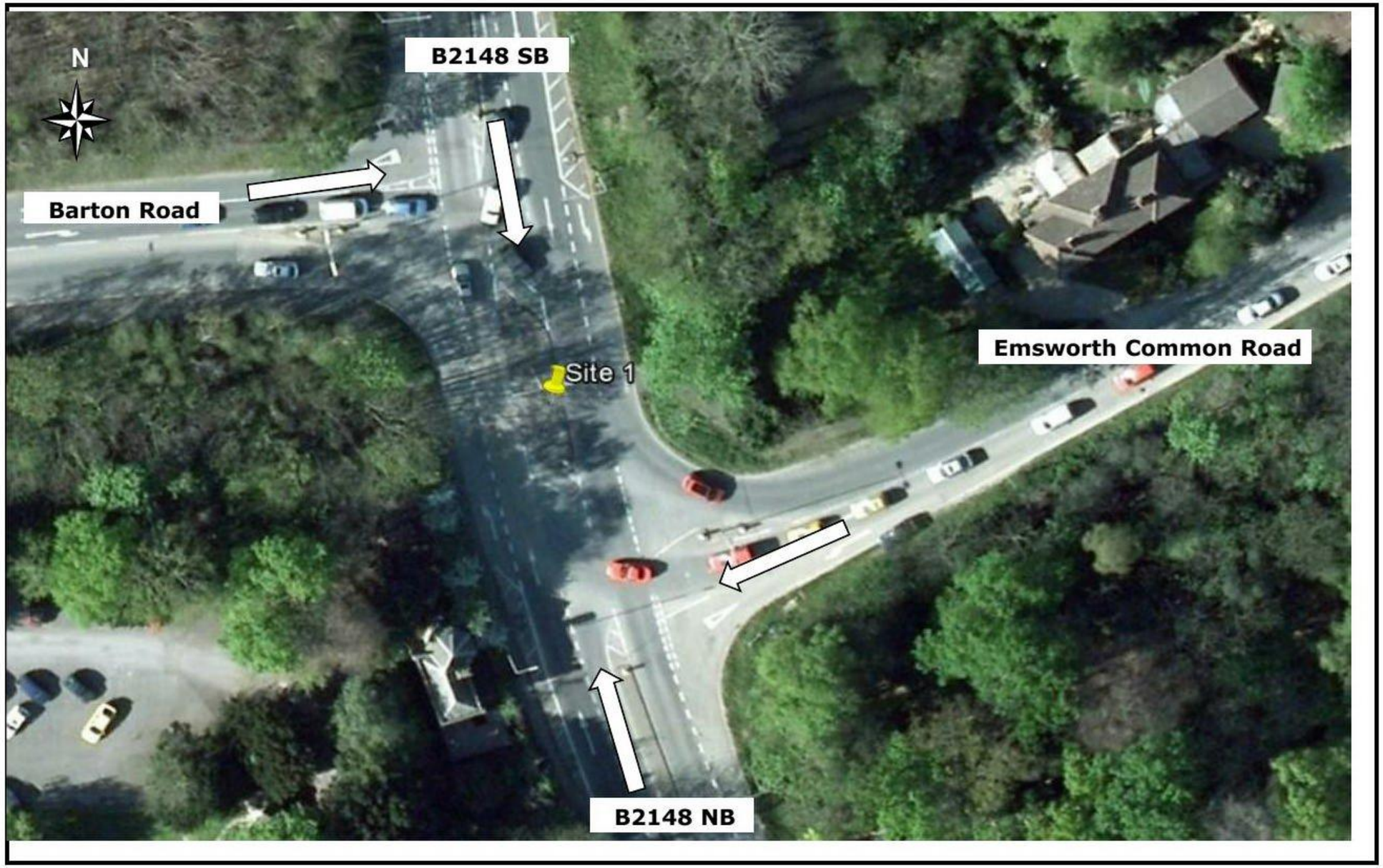

Advanced Transport Research	Job Number & Name:	8551 Barton Road, Havant
Site 1 - Barton Road/B2148 Comely Hill/Emswort	Client:	C & A Consulting Engineers
Queue Lengths	Date:	Thursday 11 June 2015

	Barton Road		B2148 NB Right Turn		Emsworth Common		B2148 SB Right Turn	
Times	Lane 1	Lane 2	Lane 1	Lane 2	Lane 1	Lane 2	Lane 1	Lane 2
07:00 - 07:05	0	1	0	0	0	4	0	0
07:05 - 07:10	1	3	0	0	0	3	0	0
07:10 - 07:15	0	4	0	0	0	2	0	0
07:15 - 07:20	0	3	0	0	0	2	0	0
07:20 - 07:25	0	3	0	0	0	1	0	2
07:25 - 07:30	0	8	0	0	0	2	0	1
07:30 - 07:35	0	3	0	0	1	3	0	0
07:35 - 07:40	0	4	0	1	0	3	0	0
07:40 - 07:45	1	4	0	0	0	5	0	1
07:45 - 07:50	0	6	0	0	0	2	0	1
07:50 - 07:55	0	11	0	0	0	4	0	0
07:55 - 08:00	1	6	0	1	0	6	0	0
08:00 - 08:05	0	5	0	0	0	7	0	2
08:05 - 08:10	0	5	0	1	0	5	0	2
08:10 - 08:15	1	9	0	0	1	5	0	1
08:15 - 08:20	1	12	0	3	1	4	0	1
08:20 - 08:25	0	6	0	0	2	10	0	2
08:25 - 08:30	1	5	0	1	0	5	0	1
08:30 - 08:35	1	5	0	2	1	11	0	1
08:35 - 08:40	2	4	0	0	1	7	0	2
08:40 - 08:45	1	12	0	0	1	6	0	3
08:45 - 08:50	1	8	0	0	0	4	0	2
08:50 - 08:55	1	13	0	0	1	4	0	1
08:55 - 09:00	1	7	0	1	1	4	0	0
09:00 - 09:05	0	5	0	0	1	4	0	0
09:05 - 09:10	0	2	0	0	0	3	0	1
09:10 - 09:15	1	8	0	0	1	12	0	2
09:15 - 09:20	1	6	0	0	0	5	0	1
09:20 - 09:25	0	4	0	2	0	4	0	0
09:25 - 09:30	0	4	0	2	0	3	0	0
09:30 - 09:35	0	5	0	0	0	6	0	0
09:35 - 09:40	0	5	0	0	1	3	0	1
09:40 - 09:45	1	4	0	0	0	3	0	0
09:45 - 09:50	0	2	0	0	0	3	0	0
09:50 - 09:55	0	2	0	3	1	3	0	0
09:55 - 10:00	1	4	0	0	1	3	0	1

Count in Vehicles

Lane 1 = Nearest Kerb

Advanced Transport Research	Job Number & Name:	8551 Barton Road, Havant
Site 1 - Barton Road/B2148 Comely Hill/Emswort	Client:	C & A Consulting Engineers
Queue Lengths	Date:	Thursday 11 June 2015

	Barton Road		B2148 NB Right Turn		Emsworth Common		B2148 SB Right Turn	
Times	Lane 1	Lane 2	Lane 1	Lane 2	Lane 1	Lane 2	Lane 1	Lane 2
16:00 - 16:05	2	4	0	0	1	8	0	0
16:05 - 16:10	3	9	0	0	1	6	0	2
16:10 - 16:15	1	9	0	1	1	7	0	2
16:15 - 16:20	1	5	0	0	2	13	0	1
16:20 - 16:25	1	9	0	1	1	5	0	0
16:25 - 16:30	0	6	0	0	1	11	0	1
16:30 - 16:35	2	5	0	0	1	8	0	1
16:35 - 16:40	1	7	0	1	2	6	0	1
16:40 - 16:45	1	4	0	0	2	8	0	0
16:45 - 16:50	1	2	0	0	1	9	0	1
16:50 - 16:55	1	8	0	0	2	8	0	0
16:55 - 17:00	1	4	0	0	1	6	0	1
17:00 - 17:05	1	5	0	0	0	6	0	0
17:05 - 17:10	3	8	0	0	0	18+	0	2
17:10 - 17:15	1	4	0	1	1	8	0	2
17:15 - 17:20	1	5	0	0	1	18+	0	2
17:20 - 17:25	1	11	0	0	1	15	0	1
17:25 - 17:30	1	6	0	0	0	15	0	3
17:30 - 17:35	1	5	0	0	1	18+	0	2
17:35 - 17:40	1	6	0	0	1	18+	0	2
17:40 - 17:45	1	11	0	0	1	9	0	2
17:45 - 17:50	1	5	0	0	1	9	0	0
17:50 - 17:55	2	5	0	0	1	6	0	1
17:55 - 18:00	1	5	0	0	1	9	0	1
18:00 - 18:05	1	5	0	0	1	8	0	1
18:05 - 18:10	2	6	0	0	1	5	0	2
18:10 - 18:15	1	3	0	0	1	5	0	1
18:15 - 18:20	0	4	0	0	1	5	0	1
18:20 - 18:25	1	8	0	0	1	6	0	1
18:25 - 18:30	1	10	0	0	1	5	0	2
18:30 - 18:35	1	5	0	0	0	6	0	1
18:35 - 18:40	0	4	0	0	0	2	0	0
18:40 - 18:45	1	3	0	0	0	3	0	0
18:45 - 18:50	0	1	0	0	1	3	0	1
18:50 - 18:55	0	2	0	0	1	2	0	1
18:55 - 19:00	0	4	0	0	1	3	0	0

advanced transport research

Job Number & Name: 8551 Barton Road, Havant

Site Number/Name: Site 1 - Bartons Road/B2148 Comely Hill/Emsworth Common Road

Client: C & A Consulting Engineers

Date: 11/06/2015

Weather:

Comments:

Advanced Transport Research	*Job Number & Name:*	**8551 Barton Road, Havant**
Site 1 - Bartons Road/B2148 Comely Hill/Emsworth Com	*Client:*	**C & A Consulting Engineers**
Site Plan	*Date:*	**Thursday 11 Jun 2015**

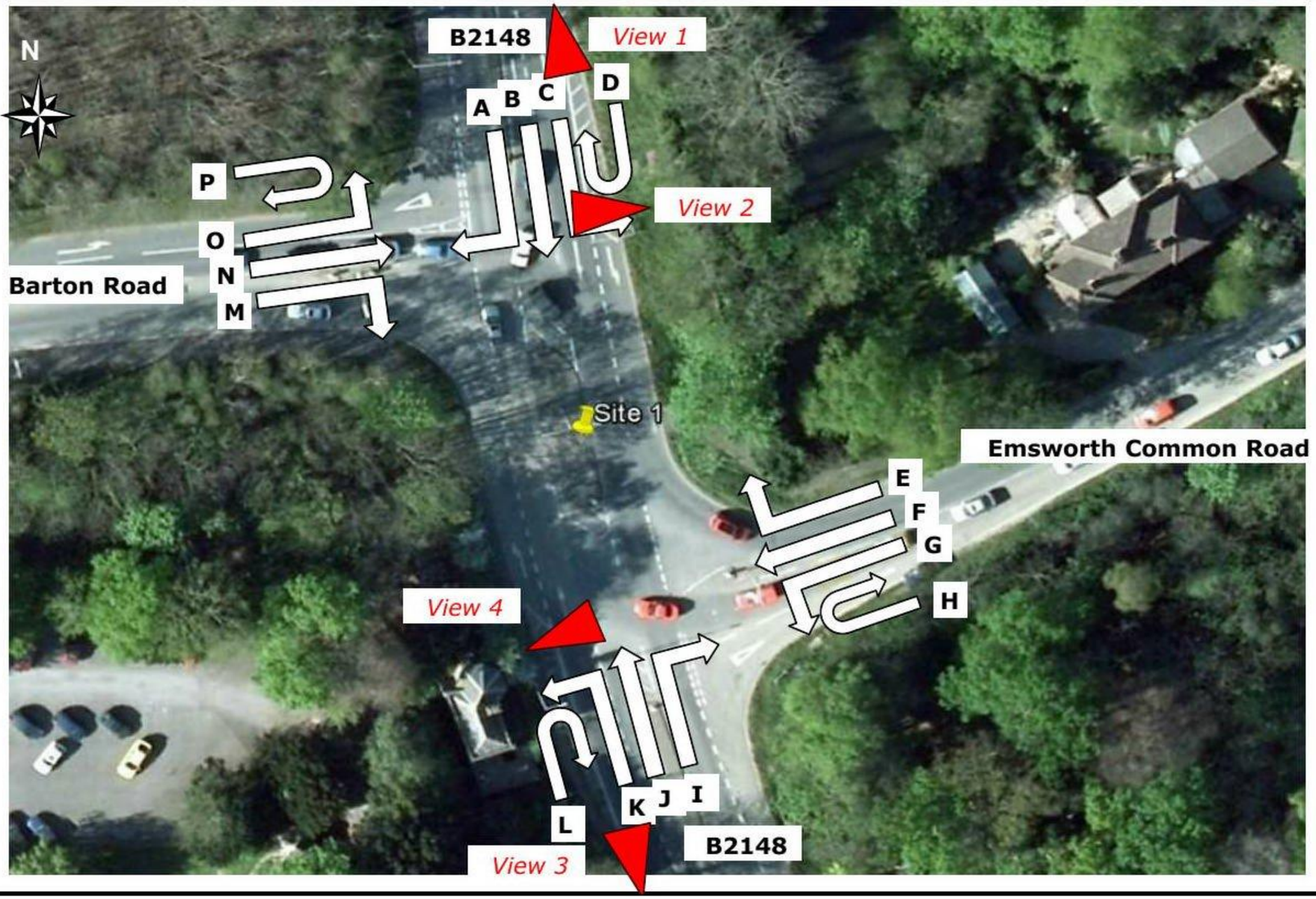

Advanced Transport Research	*Job Number & Name:*	**8551 Barton Road, Ha**
Site 1 - Bartons Road/B2148 Comely Hill/Emsworth Commo	*Client:*	**C & A Consulting Engi**
Flow Diagram	*Date:*	**Thursday 11 Jun 2015**

Select Period **07:00**

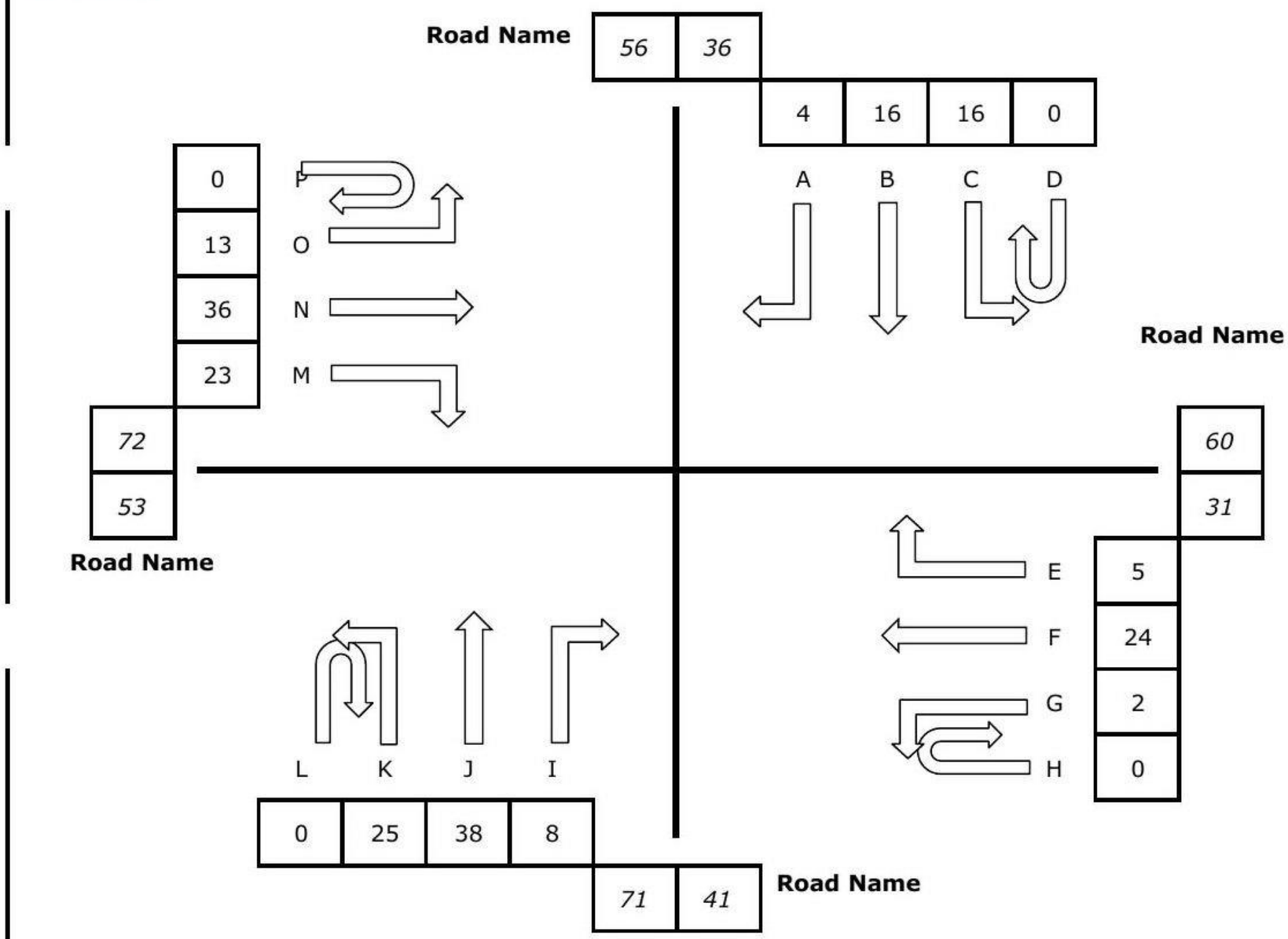

Advanced Transport Research

Site 1 - Bartons Road/B2148 Comely Hill/Emsworth Common Road

Classified Counts

	Movement A							Movement B							Movement C							Movement D							Movement E							Movement F							Movement G							Movement H								
Times	Cars	LGV	OGV 1	OGV 2	PSV	M/B	Cyc	Cars	LGV	OGV 1	OGV 2	PSV	M/B	Cyc	Cars	LGV	OGV 1	OGV 2	PSV	M/B	Cyc	Cars	LGV	OGV 1	OGV 2	PSV	M/B	Cyc	Cars	LGV	OGV 1	OGV 2	PSV	M/B	Cyc	Cars	LGV	OGV 1	OGV 2	PSV	M/B	Cyc	Cars	LGV	OGV 1	OGV 2	PSV	M/B	Cyc	Cars	LGV	OGV 1	OGV 2	PSV	M/B	Cyc	Cars	LGV
07:00 - 07:15	3	0	1	0	0	0	0	11	5	0	0	0	0	0	10	3	2	0	0	0	1	0	0	0	0	0	0	0	4	1	0	0	0	0	0	21	2	1	0	0	0	0	2	0	0	0	0	0	0	0	0	0	0	0	0	0	6	1
07:15 - 07:30	6	0	0	0	0	0	0	9	6	1	0	0	1	1	17	9	0	0	0	0	0	0	0	0	0	0	0	0	6	2	1	0	0	0	0	15	2	0	0	0	1	0	1	1	0	0	0	0	0	0	0	0	0	0	0	0	6	2
07:30 - 07:45	7	1	0	0	0	0	0	25	4	3	0	0	0	0	20	2	2	0	0	0	0	0	0	0	0	0	0	0	13	2	0	0	0	0	0	30	3	0	1	0	0	0	1	1	0	0	0	0	0	0	0	0	0	0	0	0	11	3
07:45 - 08:00	19	1	0	0	0	0	0	34	6	3	0	0	0	0	24	0	0	0	0	0	0	0	0	0	0	0	0	0	10	3	1	0	0	0	0	30	3	1	0	0	0	1	2	1	0	0	0	0	0	0	0	0	0	0	0	0	14	1
Hourly Total	**35**	**2**	**1**	**0**	**0**	**0**	**0**	**79**	**21**	**7**	**0**	**0**	**1**	**1**	**71**	**14**	**4**	**0**	**0**	**0**	**1**	**0**	**0**	**0**	**0**	**0**	**0**	**0**	**33**	**8**	**2**	**0**	**0**	**0**	**0**	**96**	**10**	**2**	**1**	**0**	**1**	**1**	**6**	**3**	**0**	**0**	**0**	**0**	**0**	**0**	**0**	**0**	**0**	**0**	**0**	**0**	**37**	**7**
08:00 - 08:15	22	3	0	0	0	0	0	21	5	0	0	0	0	0	29	5	0	0	0	1	0	0	0	0	0	0	0	0	14	1	1	0	0	0	0	35	3	0	1	0	0	0	2	0	0	0	0	0	0	0	0	0	0	0	0	0	13	2
08:15 - 08:30	32	1	0	0	0	0	0	38	11	1	0	2	0	0	28	5	1	0	0	1	0	0	0	0	0	0	0	0	8	0	0	0	0	0	0	30	4	1	1	0	0	0	4	1	0	0	0	0	0	0	0	0	0	0	0	0	17	2
08:30 - 08:45	23	0	1	0	0	1	0	28	5	0	0	1	0	0	24	1	1	0	0	0	0	0	0	0	0	0	0	0	13	1	2	0	0	0	0	23	2	1	2	0	0	0	4	0	0	0	0	0	0	0	0	0	0	0	0	0	23	1
08:45 - 09:00	20	0	2	0	0	0	0	39	7	0	0	0	0	0	18	1	0	0	0	0	0	0	0	0	0	0	0	0	12	0	0	0	0	0	0	28	3	1	0	0	0	0	5	1	0	0	0	0	1	0	0	0	0	0	0	0	13	0
Hourly Total	**97**	**4**	**3**	**0**	**0**	**1**	**0**	**126**	**28**	**1**	**0**	**3**	**0**	**0**	**99**	**12**	**2**	**0**	**0**	**2**	**0**	**0**	**0**	**0**	**0**	**0**	**0**	**0**	**47**	**2**	**3**	**0**	**0**	**0**	**0**	**116**	**12**	**3**	**4**	**0**	**0**	**0**	**15**	**2**	**0**	**0**	**0**	**0**	**1**	**0**	**0**	**0**	**0**	**0**	**0**	**0**	**66**	**5**
09:00 - 09:15	23	2	0	0	0	0	0	28	1	2	0	0	0	0	20	2	0	0	0	0	0	0	0	0	0	0	0	0	10	0	0	0	0	0	0	23	1	0	5	0	0	0	4	1	0	0	0	0	0	0	0	0	0	0	0	0	4	1
09:15 - 09:30	12	2	0	0	0	0	0	24	4	2	0	0	0	0	14	3	0	0	0	0	0	0	0	0	0	0	0	0	9	1	1	0	0	0	0	24	7	2	1	0	0	0	2	0	0	0	0	0	0	0	0	0	0	0	0	0	10	2
09:30 - 09:45	7	3	0	0	0	0	0	19	0	0	0	0	0	0	10	1	0	0	0	0	0	0	0	0	0	0	0	0	11	2	1	0	0	0	0	23	0	1	1	0	1	0	6	0	0	0	0	0	0	0	0	0	0	0	0	0	6	0
09:45 - 10:00	12	2	0	0	0	0	0	24	0	0	0	0	0	0	14	2	1	0	0	0	0	0	0	0	0	0	0	0	5	1	1	0	0	0	0	16	2	0	2	0	1	1	5	3	0	1	0	0	0	0	0	0	0	0	0	0	2	0
Hourly Total	**54**	**9**	**0**	**0**	**0**	**0**	**0**	**95**	**5**	**4**	**0**	**0**	**0**	**0**	**58**	**8**	**1**	**0**	**0**	**0**	**0**	**0**	**0**	**0**	**0**	**0**	**0**	**0**	**35**	**4**	**3**	**0**	**0**	**0**	**0**	**86**	**10**	**3**	**9**	**0**	**2**	**1**	**17**	**4**	**0**	**1**	**0**	**0**	**0**	**0**	**0**	**0**	**0**	**0**	**0**	**0**	**22**	**3**
16:00 - 16:15	20	5	1	0	0	0	0	32	6	1	0	0	0	0	14	3	0	0	0	0	0	0	0	0	0	0	0	0	16	2	0	0	0	0	0	37	8	1	3	0	0	1	12	1	0	0	0	0	0	0	0	0	0	0	0	0	5	0
16:15 - 16:30	16	1	0	0	0	0	0	38	2	0	0	1	1	0	11	3	1	0	0	0	0	0	0	0	0	0	0	0	14	5	0	0	0	0	0	47	13	3	4	0	2	0	10	3	0	0	0	0	0	0	0	0	0	0	0	0	8	0
16:30 - 16:45	14	0	0	0	0	0	0	50	6	1	0	0	0	0	12	3	0	0	0	2	0	0	0	0	0	0	0	0	18	1	1	0	0	0	0	47	12	1	1	0	2	0	13	2	0	0	0	0	1	0	0	0	0	0	0	0	8	1
16:45 - 17:00	16	0	0	0	0	0	0	37	6	0	0	0	0	0	10	2	0	0	0	0	0	0	0	0	0	0	0	0	14	4	1	0	0	0	0	46	11	0	0	0	0	0	9	1	0	0	0	0	0	0	0	0	0	0	0	0	9	0
Hourly Total	**66**	**6**	**1**	**0**	**0**	**0**	**0**	**157**	**20**	**2**	**0**	**1**	**1**	**0**	**47**	**11**	**1**	**0**	**0**	**2**	**0**	**0**	**0**	**0**	**0**	**0**	**0**	**0**	**62**	**12**	**2**	**0**	**0**	**0**	**0**	**177**	**44**	**5**	**8**	**0**	**4**	**1**	**44**	**7**	**0**	**0**	**0**	**0**	**1**	**0**	**0**	**0**	**0**	**0**	**0**	**0**	**30**	**1**
17:00 - 17:15	15	0	0	0	1	0	0	46	3	1	0	0	0	0	18	3	0	0	0	0	0	0	0	0	0	0	0	0	18	2	0	0	0	0	0	53	9	1	0	0	1	0	4	0	0	0	0	0	0	0	0	0	0	0	0	0	7	1
17:15 - 17:30	18	2	0	0	0	1	0	46	3	0	0	0	1	0	12	3	1	0	0	0	0	0	0	0	0	0	0	0	15	3	0	0	0	0	0	69	9	0	0	0	1	1	7	1	0	0	0	0	0	0	0	0	0	0	0	0	5	0
17:30 - 17:45	21	2	0	0	0	0	0	57	3	0	0	0	1	0	16	1	0	0	0	0	0	0	0	0	0	0	0	0	19	3	0	0	0	0	0	65	12	0	0	0	0	0	10	2	0	0	0	0	0	0	0	0	0	0	0	0	3	1
17:45 - 18:00	19	2	0	0	0	0	0	47	7	1	0	0	2	0	13	0	1	0	0	2	0	0	0	0	0	0	0	0	20	3	0	0	0	1	0	39	5	0	1	0	0	0	7	1	0	0	0	1	0	0	0	0	0	0	0	0	2	0
Hourly Total	**73**	**6**	**0**	**0**	**0**	**2**	**0**	**196**	**20**	**2**	**0**	**0**	**4**	**0**	**60**	**7**	**2**	**0**	**0**	**2**	**0**	**0**	**0**	**0**	**0**	**0**	**0**	**0**	**72**	**11**	**0**	**0**	**0**	**1**	**0**	**226**	**35**	**1**	**1**	**0**	**2**	**1**	**28**	**4**	**0**	**0**	**0**	**1**	**0**	**0**	**0**	**0**	**0**	**0**	**0**	**0**	**17**	**2**
18:00 - 18:15	10	0	0	0	0	0	0	40	0	1	0	0	1	0	7	1	0	0	0	1	0	0	0	0	0	0	0	0	10	1	0	0	0	2	0	52	8	0	0	0	2	0	5	1	0	0	0	0	0	0	0	0	0	0	0	0	2	0
18:15 - 18:30	17	0	0	0	0	0	0	52	2	0	1	0	0	0	12	1	0	0	0	0	0	0	0	0	0	0	0	0	13	0	1	0	0	0	0	42	1	0	0	0	0	0	7	0	0	0	0	0	0	0	0	0	0	0	0	0	2	0
18:30 - 18:45	11	1	0	0	0	0	0	41	2	2	0	0	0	0	10	0	0	0	0	0	1	0	0	0	0	0	0	0	8	1	1	0	0	0	0	13	5	0	0	0	2	1	0	0	0	0	0	0	0	0	0	0	0	0	0	0	3	0
18:45 - 19:00	10	0	0	0	0	0	0	41	6	0	0	1	1	0	12	0	0	0	0	0	0	0	0	0	0	0	0	0	9	1	0	0	0	0	0	18	1	0	0	0	0	0	7	0	1	0	0	1	0	0	0	0	0	0	0	0	2	0
Hourly Total	**48**	**1**	**0**	**0**	**0**	**0**	**0**	**174**	**10**	**3**	**1**	**1**	**2**	**0**	**41**	**2**	**0**	**0**	**0**	**1**	**1**	**0**	**0**	**0**	**0**	**0**	**0**	**0**	**40**	**3**	**2**	**0**	**0**	**2**	**0**	**125**	**15**	**0**	**0**	**0**	**4**	**1**	**19**	**1**	**1**	**0**	**0**	**1**	**0**	**0**	**0**	**0**	**0**	**0**	**0**	**0**	**9**	**0**

Job Number & Name: **8551 Barton Road, Havant**
Client: **C & A Consulting Engineers**
Date: **Thursday 11 June 2015**

Movement I					Movement J							Movement K							Movement L							Movement M							Movement N							Movement O							Movement P						
OGV 1	OGV 2	PSV	M/B	Cyc	Cars	LGV	OGV 1	OGV 2	PSV	M/B	Cyc	Cars	LGV	OGV 1	OGV 2	PSV	M/B	Cyc	Cars	LGV	OGV 1	OGV 2	PSV	M/B	Cyc	Cars	LGV	OGV 1	OGV 2	PSV	M/B	Cyc	Cars	LGV	OGV 1	OGV 2	PSV	M/B	Cyc	Cars	LGV	OGV 1	OGV 2	PSV	M/B	Cyc	Cars	LGV	OGV 1	OGV 2	PSV	M/B	Cyc
1	0	0	0	0	32	3	0	0	3	0	0	19	4	2	0	0	0	0	0	0	0	0	0	0	0	15	5	0	0	0	2	1	25	9	2	0	0	0	0	11	2	0	0	0	0	0	0	0	0	0	0	0	0	0
0	0	0	0	0	34	6	0	0	0	0	0	31	3	0	0	0	1	1	0	0	0	0	0	0	0	17	7	0	1	0	0	0	35	16	0	1	0	2	0	5	2	0	0	0	0	0	0	0	0	0	0	0	0	0
0	0	0	0	0	46	9	2	0	0	0	0	27	3	1	0	0	0	1	0	0	0	0	0	0	0	20	7	1	0	0	0	0	37	12	4	1	0	1	0	15	2	0	0	0	0	0	0	0	0	0	0	0	0	0
0	0	0	0	0	45	4	0	0	0	1	0	53	10	0	0	0	0	0	0	0	0	0	0	0	0	33	12	0	0	0	0	0	39	15	2	0	0	0	0	14	0	1	0	0	0	0	0	0	0	0	0	0	0	0
1	**0**	**0**	**0**	**0**	**157**	**22**	**2**	**0**	**3**	**1**	**0**	**130**	**20**	**3**	**0**	**0**	**1**	**2**	**0**	**0**	**0**	**0**	**0**	**0**	**0**	**85**	**31**	**1**	**1**	**0**	**2**	**1**	**136**	**52**	**8**	**2**	**0**	**3**	**0**	**45**	**6**	**1**	**0**	**0**	**0**	**0**	**0**	**0**	**0**	**0**	**0**	**0**	**0**
0	0	0	0	0	48	6	0	0	0	3	0	44	4	1	1	0	1	1	0	0	0	0	0	0	0	34	4	1	0	0	0	2	43	6	1	2	0	0	0	11	2	0	0	0	0	1	0	0	0	0	0	0	0	0
1	1	0	0	0	43	4	0	1	0	0	0	49	5	0	0	1	0	0	0	0	0	0	0	0	0	33	11	3	0	0	0	1	64	7	4	1	0	0	1	14	0	0	0	0	1	0	0	0	0	0	0	0	0	0
0	0	0	0	0	50	6	2	0	0	0	0	63	4	2	0	0	1	0	0	0	0	0	0	0	0	29	3	3	0	0	0	0	46	8	1	1	0	0	1	19	1	0	0	0	0	0	0	0	0	0	0	0	0	0
0	0	0	0	0	37	1	1	0	0	0	0	65	6	0	0	1	0	0	0	0	0	0	0	0	0	40	4	1	0	0	0	0	46	6	0	4	0	0	0	16	1	0	0	0	0	0	0	0	0	0	0	0	0	0
1	**1**	**0**	**0**	**0**	**178**	**17**	**3**	**1**	**0**	**3**	**0**	**221**	**19**	**3**	**1**	**2**	**2**	**1**	**0**	**0**	**0**	**0**	**0**	**0**	**0**	**136**	**22**	**8**	**0**	**0**	**0**	**3**	**179**	**27**	**6**	**8**	**0**	**0**	**2**	**60**	**4**	**0**	**0**	**0**	**1**	**1**	**0**	**0**	**0**	**0**	**0**	**0**	**0**
0	0	0	0	0	36	1	2	0	0	0	0	55	5	1	0	1	0	0	0	0	0	0	0	0	0	21	7	2	1	0	0	0	20	7	2	1	0	0	0	12	0	0	0	0	0	0	0	0	0	0	0	0	0	0
1	0	0	0	0	23	3	1	0	0	0	0	31	1	2	0	0	0	0	0	0	0	0	0	0	0	30	6	0	0	1	0	0	22	8	0	0	0	0	0	15	3	0	0	0	0	0	0	0	0	0	0	0	0	0
0	0	0	0	0	29	4	1	0	0	0	0	45	6	0	0	0	0	0	0	0	0	0	0	0	0	29	2	2	0	0	0	0	31	2	0	1	0	0	0	10	2	0	0	0	0	0	0	0	0	0	0	0	0	0
0	1	0	0	0	19	5	0	1	0	0	0	24	5	2	0	0	1	0	0	0	0	0	0	0	0	32	2	0	0	0	0	0	26	4	0	3	0	0	0	12	4	0	0	0	0	0	0	0	0	0	0	0	0	0
1	**1**	**0**	**0**	**0**	**107**	**13**	**4**	**1**	**0**	**0**	**0**	**155**	**17**	**5**	**0**	**1**	**1**	**0**	**0**	**0**	**0**	**0**	**0**	**0**	**0**	**112**	**17**	**4**	**1**	**1**	**0**	**0**	**99**	**21**	**2**	**5**	**0**	**0**	**0**	**49**	**9**	**0**	**0**	**0**	**0**	**0**	**0**	**0**	**0**	**0**	**0**	**0**	**0**
0	0	0	0	0	36	7	2	0	0	1	0	29	6	1	1	0	0	0	0	0	0	0	0	0	0	37	2	1	0	0	0	1	27	3	1	2	0	0	0	33	1	1	0	0	0	0	0	0	0	0	0	0	0	0
0	0	0	0	0	36	3	1	0	0	0	0	34	9	2	0	0	0	0	0	0	0	0	0	0	0	53	10	2	0	0	0	1	22	4	2	0	0	0	1	34	2	0	0	0	1	0	0	0	0	0	0	0	0	0
0	0	0	0	0	32	5	0	0	0	0	0	42	8	4	0	0	2	0	0	0	0	0	0	0	0	61	8	3	0	0	0	0	25	8	0	0	0	0	1	43	1	0	0	0	0	0	0	0	0	0	0	0	0	0
0	0	0	2	0	29	7	0	0	0	1	0	36	13	2	0	0	0	0	0	0	0	0	0	0	0	45	2	0	0	0	1	0	29	2	0	0	0	0	0	22	2	0	0	0	0	0	0	0	0	0	0	0	0	0
0	**0**	**0**	**2**	**0**	**133**	**22**	**3**	**0**	**0**	**2**	**0**	**141**	**36**	**9**	**1**	**0**	**2**	**0**	**0**	**0**	**0**	**0**	**0**	**0**	**0**	**196**	**22**	**6**	**0**	**0**	**1**	**2**	**103**	**17**	**3**	**2**	**0**	**0**	**2**	**132**	**6**	**1**	**0**	**0**	**1**	**0**	**0**	**0**	**0**	**0**	**0**	**0**	**0**
0	0	0	0	0	37	5	0	0	0	0	0	34	5	1	0	1	2	0	0	0	0	0	0	0	0	36	7	0	0	0	1	0	32	4	0	0	0	0	1	25	2	0	0	0	0	2	0	0	0	0	0	0	0	0
0	0	0	0	0	35	3	0	0	0	0	0	43	2	2	0	0	1	0	0	0	0	0	0	0	0	42	5	1	0	0	0	0	31	6	0	0	0	2	0	26	0	0	0	0	1	0	0	0	0	0	0	0	0	0
0	0	0	0	0	46	1	0	0	0	1	1	38	7	0	0	0	1	1	0	0	0	0	0	0	0	45	7	0	0	0	0	0	35	3	0	0	0	1	0	16	1	0	0	0	0	0	0	0	0	0	0	0	0	0
0	0	0	0	0	30	1	0	0	0	0	1	49	2	0	0	0	1	0	0	0	0	0	0	0	0	45	8	0	0	0	1	0	24	1	0	0	0	1	0	11	1	0	0	0	1	1	0	0	0	0	0	0	0	0
0	**0**	**0**	**0**	**0**	**148**	**10**	**0**	**0**	**0**	**1**	**2**	**164**	**16**	**3**	**0**	**1**	**5**	**1**	**0**	**0**	**0**	**0**	**0**	**0**	**0**	**168**	**27**	**1**	**0**	**0**	**2**	**0**	**122**	**14**	**0**	**0**	**0**	**4**	**1**	**78**	**4**	**0**	**0**	**0**	**2**	**3**	**0**	**0**	**0**	**0**	**0**	**0**	**0**
0	0	0	0	0	29	1	1	0	0	0	0	25	4	0	0	0	1	0	0	0	0	0	0	0	0	36	1	1	0	0	1	0	26	4	0	1	0	0	0	20	1	0	0	0	0	0	0	0	0	0	0	0	0	0
1	0	0	0	0	26	2	0	0	0	0	0	33	3	0	0	0	1	0	0	0	0	0	0	0	0	46	3	2	0	0	0	0	28	1	0	0	0	0	2	11	0	0	0	0	0	0	0	0	0	0	0	0	0	0
0	0	0	0	0	21	0	0	0	0	0	0	26	6	0	0	0	0	0	0	0	0	0	0	0	0	30	5	0	0	0	0	0	22	2	0	0	0	1	0	12	2	0	0	0	1	0	0	0	0	0	0	0	0	0
0	0	0	1	0	33	1	0	0	0	1	0	40	1	0	0	0	1	0	0	0	0	0	0	0	0	28	2	0	0	0	1	0	26	3	0	0	0	1	2	16	1	0	0	0	0	0	0	0	0	0	0	0	0	0
1	**0**	**0**	**1**	**0**	**109**	**4**	**1**	**0**	**0**	**1**	**0**	**124**	**14**	**0**	**0**	**0**	**3**	**0**	**0**	**0**	**0**	**0**	**0**	**0**	**0**	**140**	**11**	**3**	**0**	**0**	**2**	**0**	**102**	**10**	**0**	**1**	**0**	**2**	**4**	**59**	**4**	**0**	**0**	**0**	**1**	**0**	**0**	**0**	**0**	**0**	**0**	**0**	**0**

Microsoft Visual Studio

File Edit View Project Build Debug Team Tools Test Analyze Window Help

Site 1 - Surface Mud Drill Activity (Multiplewells Division Mud)

File Edit View

Mon Surface Mud. Drill
T.D & Installing Casing
Thursday 17 June 2021

| | Mud Drill A | | | | | | | Mud Drill B | | | | | | | Mud Drill C | | | | | | | Mud Drill D | | | | | | | Mud Drill E | | | | | | | Mud Drill F | | | | | | | Mud Drill G | | | | | | | Mud Drill H | | | | | | | Mud Drill I | | | | | | | Mud Drill J | | | | | | | Mud Drill K | | | | | | | Mud Drill L | | | | | | | Mud Drill M | | | | | | | Mud Drill N | | | | | | | Mud Drill O | | | | | | | Mud Drill P | | | | | | |
|---|---|---