TIMBER WINDOWS DIRECT

Reference: 3468-4-v1
Date: 12th Aug 2
Total Items: 7
Page: 1 of 9

Project Summary

		Each (excl. VAT)	Total (excl. VAT)
	1. WF05 Quantity: 1 Supply only	Flush Casement - Softwood - Single Colour	[redacted]
	2. WF07 Quantity: 1 Supply only	Flush Casement - Softwood - Single Colour	
	3. WS01 Quantity: 1 Supply only	Flush Casement - Softwood - Single Colour	
	4. WS02 Quantity: 1 Supply only	Flush Casement - Softwood - Single Colour	
	5. WS03 Quantity: 1 Supply only	Flush Casement - Softwood - Single Colour	
	6. WF08 Quantity: 1 Supply only	Sash on Springs - Softwood - Single Colour	

Quotation for:
Alan Linton

Prepared by:
[redacted]

Lead time: 5 - 6 weeks **Guarantee:** quote - 30 days, products - 5 years

Payment terms:
50% Deposit Prior to order - 50% Prior to delivery - Business account details: Name: Timber Products Direct: Account No: 84391160: Sort Code: 30 - 94 - 42: Ref: YOUR NAME

Net Price:	See over
VAT (20%):	See over
Total Price:	See over

Please note - Images shown are for illustrative purposes. Dimensions given are illustrative. Printers & computer screens cannot be relied upon to accurately replicate colours.

Produced using Framepoint® Technology. Copyright TommyTrinder.com

Project Summary

		Each (excl. VAT)	Total (excl. VAT)
7. WF09 Quantity: 1 Supply only	Sash on Springs - Softwood - Single Colour	£610.00	£610.00

Quotation for:
Alan Linton

Prepared by:
Nina Skowronska nina@timberwindows.direct 07977273444

Lead time: 5 - 6 weeks **Guarantee:** quote - 30 days, products - 5 years

Payment terms:
50% Deposit Prior to order - 50% Prior to delivery - Business account details: Name: Timber Products Direct: Account No: 84391160: Sort Code: 30 - 94 - 42: Ref: YOUR NAME

Net Price: [redacted]
VAT (20%):
Total Price:

Produced using Framepoint® Technology. Copyright TommyTrinder.com

Technical detail: 1 - WF05 - Supply only

Quantity: 1

Viewed from outside

Viewed from inside

Flush Casement - Softwood - Single Colour

Frame:	Standard Ovolo
Sash:	Standard
Mullion:	Slim Ovolo
Bead:	Ovolo
Cill:	Hardwood 60mm
Astragal bar:	Standard Bevel Out/Ovolo In
Frame Joint Type:	Traditional
Sash Joint Type:	Traditional

Colour: Signal White

Window Handle: Heritage Monkey Tail - Heritage Black

Glass: Double Glazed 24mm 4/16/4 - 20mm Swiss Spacer WHITE - back to back spacer - Clear

Please note - Images shown are for illustrative purposes. Dimensions given are illustrative. Printers & computer screens cannot be relied upon to accurately replicate colours.

Produced using Framepoint® Technology. Copyright TommyTrinder.com

Technical detail: 2 - WF07 - Supply only

Quantity: 1

Viewed from outside

Viewed from inside

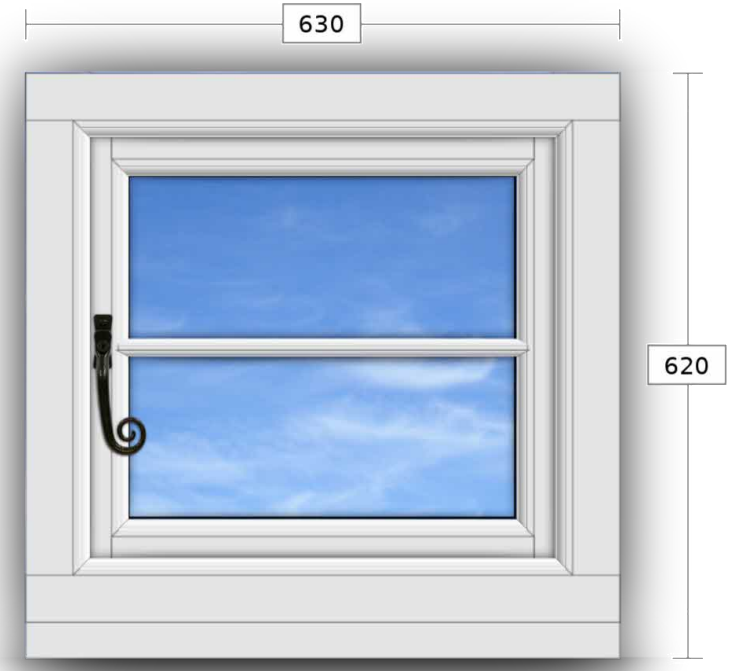

Flush Casement - Softwood - Single Colour

Frame: Standard Ovolo
Sash: Standard
Bead: Ovolo
Cill: Hardwood 60mm
Astragal bar: Standard Bevel Out/Ovolo In
Frame Joint Type: Traditional
Sash Joint Type: Traditional

Colour: Signal White

Window Handle: Heritage Monkey Tail - Heritage Black

Glass: Double Glazed 24mm 4/16/4 - 20mm Swiss Spacer WHITE - back to back spacer - Clear

Please note - Images shown are for illustrative purposes. Dimensions given are illustrative. Printers & computer screens cannot be relied upon to accurately replicate colours.

Produced using Framepoint® Technology. Copyright TommyTrinder.com

Technical detail: 3 - WS01 - Supply only

Quantity: 1

Viewed from outside

Viewed from inside

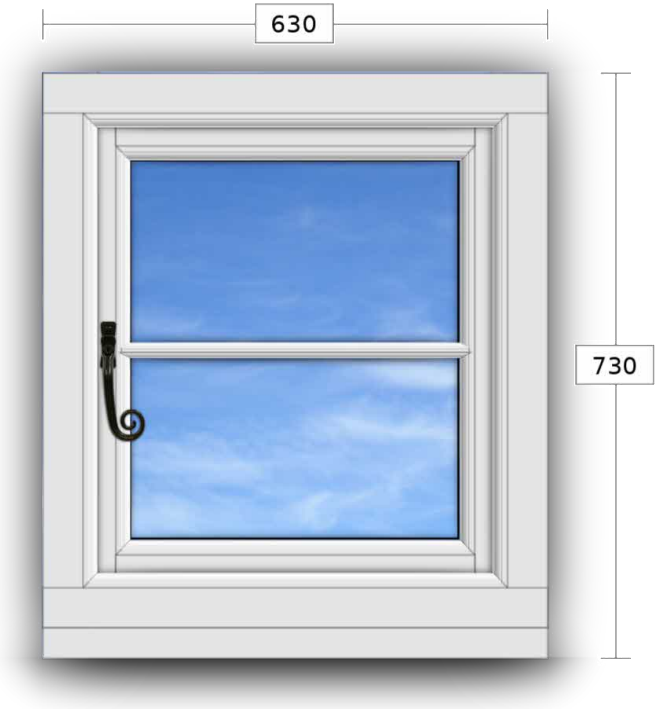

Flush Casement - Softwood - Single Colour

Frame:	Standard Ovolo	**Colour:**	Signal White
Sash:	Standard		
Bead:	Ovolo		
Cill:	Hardwood 60mm		
Astragal bar:	Standard Bevel Out/Ovolo In		
Frame Joint Type:	Traditional		
Sash Joint Type:	Traditional		

Window Handle: Heritage Monkey Tail - Heritage Black

Glass: Double Glazed 24mm 4/16/4 - 20mm Swiss Spacer WHITE - back to back spacer - Clear

Please note - Images shown are for illustrative purposes. Dimensions given are illustrative. Printers & computer screens cannot be relied upon to accurately replicate colours.

Produced using Framepoint® Technology. Copyright TommyTrinder.com

Technical detail: 4 - WS02 - Supply only

Quantity: 1

Viewed from outside

Viewed from inside

Flush Casement - Softwood - Single Colour

Frame: Standard Ovolo
Sash: Standard
Bead: Ovolo
Cill: Hardwood 60mm
Astragal bar: Standard Bevel Out/Ovolo In
Frame Joint Type: Traditional
Sash Joint Type: Traditional

Colour: Signal White

Window Handle: Heritage Monkey Tail - Heritage Black

Glass: Double Glazed 24mm 4/16/4 - 20mm Swiss Spacer WHITE - back to back spacer - Clear

Please note - Images shown are for illustrative purposes. Dimensions given are illustrative. Printers & computer screens cannot be relied upon to accurately replicate colours.

Produced using Framepoint® Technology. Copyright TommyTrinder.com

Technical detail: 5 - WS03 - Supply only

Quantity: 1

Viewed from outside

Viewed from inside

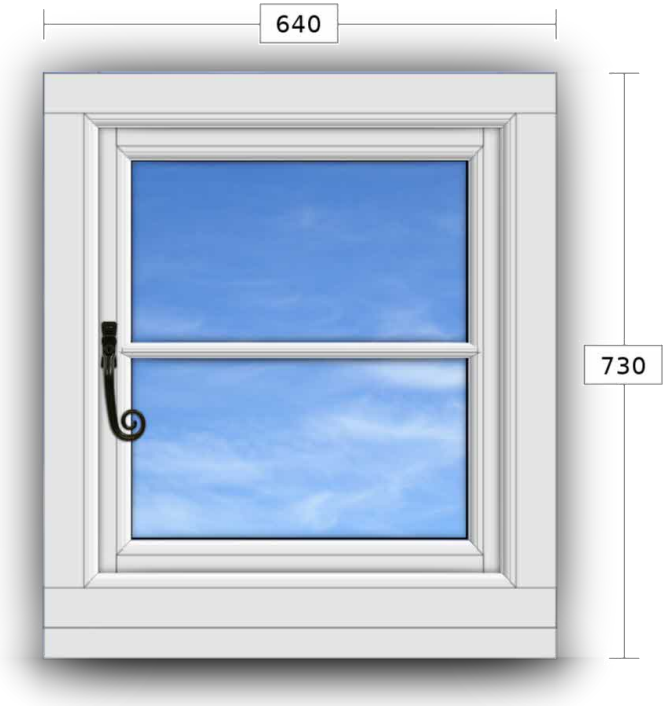

Flush Casement - Softwood - Single Colour

Frame: Standard Ovolo
Sash: Standard
Bead: Ovolo
Cill: Hardwood 60mm
Astragal bar: Standard Bevel Out/Ovolo In
Frame Joint Type: Traditional
Sash Joint Type: Traditional

Colour: Signal White

Window Handle: Heritage Monkey Tail - Heritage Black

Glass: Double Glazed 24mm 4/16/4 - 20mm Swiss Spacer WHITE - back to back spacer - Clear

Please note - Images shown are for illustrative purposes. Dimensions given are illustrative. Printers & computer screens cannot be relied upon to accurately replicate colours.

Produced using Framepoint® Technology. Copyright TommyTrinder.com

Technical detail: 6 - WF08 - Supply only

Quantity: 1

Viewed from outside

Viewed from inside

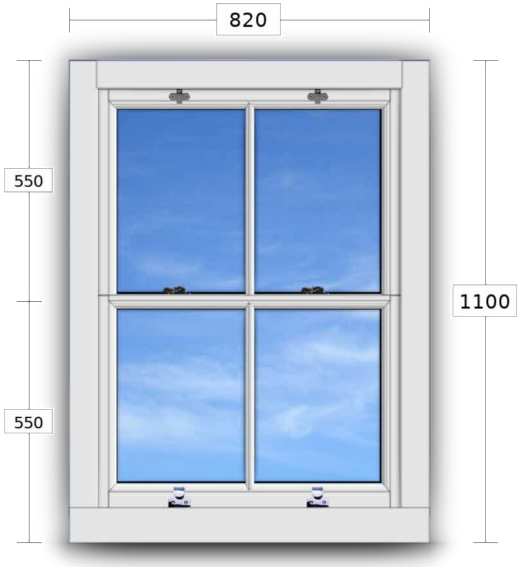

Sash on Springs - Softwood - Single Colour

Frame:	Standard Jamb
Sash Bottom Rail:	Standard Bottom Rail
Sash Meeting Rail:	Slim Meeting Stile
Sash Sides:	Standard Stile
Sash Top Rail:	Standard Stile
Bead:	Ovolo
Cill species:	Smooth White
Cill:	Hardwood Flush
Astragal bar:	Standard Bevel Out/Ovolo In
Frame Joint Type:	Traditional
Transom/Mullion Joint Type:	Mitred
Sash Joint Type:	Traditional

Colour: Signal White

Vertical Slider Catch:	Fitch Locking Polished Chrome
Sash Ring:	Eye Silver Chrome
Sash Lift:	Hook Lift Polished Chrome
Sash Horn:	H5

Glass: Double Glazed 24mm 4/16/4 - 20mm Swiss Spacer WHITE - back to back spacer - Clear

Please note - Images shown are for illustrative purposes. Dimensions given are illustrative. Printers & computer screens cannot be relied upon to accurately replicate colours.

Produced using Framepoint® Technology. Copyright TommyTrinder.com

Technical detail: 7 - WF09 - Supply only

Quantity: 1

Viewed from outside

Viewed from inside

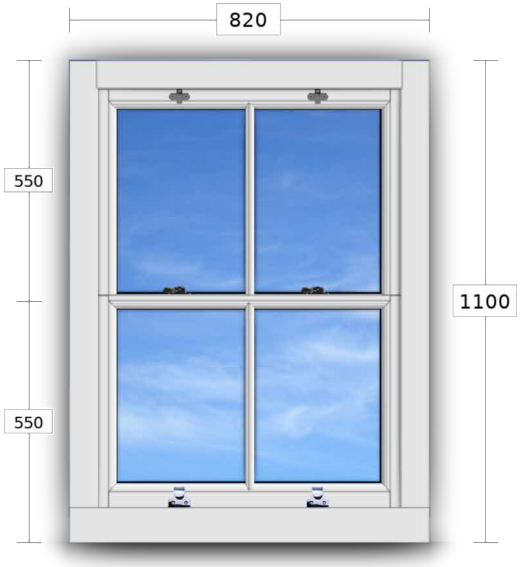

Sash on Springs - Softwood - Single Colour

Frame:	Standard Jamb
Sash Bottom Rail:	Standard Bottom Rail
Sash Meeting Rail:	Slim Meeting Stile
Sash Sides:	Standard Stile
Sash Top Rail:	Standard Stile
Bead:	Ovolo
Cill species:	Smooth White
Cill:	Hardwood Flush
Astragal bar:	Standard Bevel Out/Ovolo In
Frame Joint Type:	Traditional
Transom/Mullion Joint Type:	Mitred
Sash Joint Type:	Traditional

Colour: Signal White

Vertical Slider Catch:	Fitch Locking Polished Chrome
Sash Ring:	Eye Silver Chrome
Sash Lift:	Hook Lift Polished Chrome
Sash Horn:	H5

Glass: Double Glazed 24mm 4/16/4 - 20mm Swiss Spacer WHITE - back to back spacer - Clear

Please note - Images shown are for illustrative purposes. Dimensions given are illustrative. Printers & computer screens cannot be relied upon to accurately replicate colours.

Produced using Framepoint® Technology. Copyright TommyTrinder.com

VERTICAL SECTION OF WINDOW

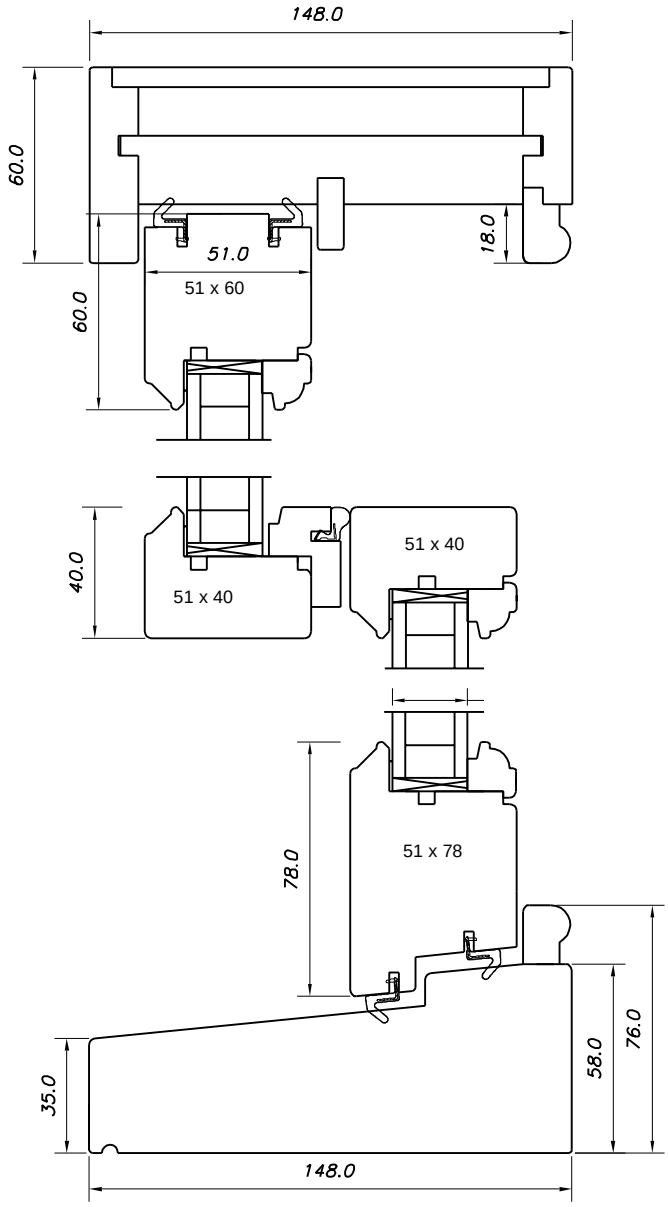

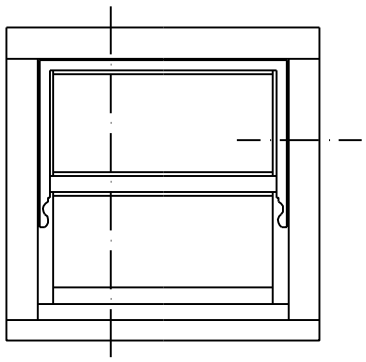

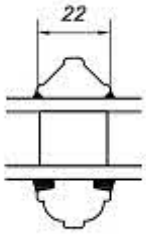

HORIZONTAL SECTION OF WINDOW

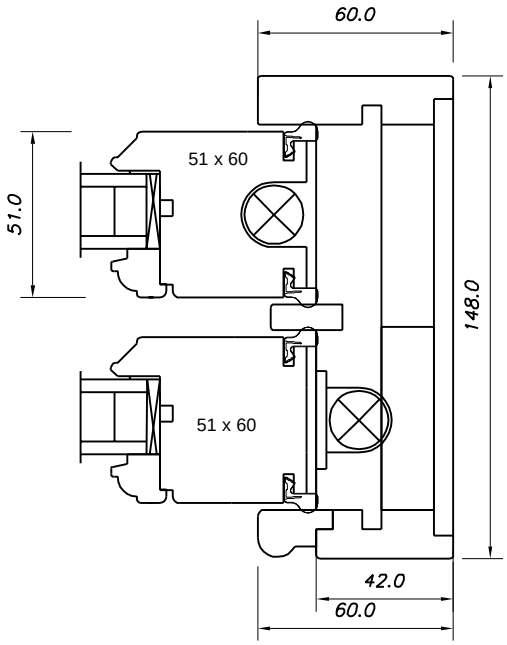

TIMBER WINDOWS DIRECT
Bespoke Wooden Sash & Casement Windows

SASH Balance Elegance 51/60

TIMBER WINDOWS DIRECT

Bespoke Wooden Sash & Casement Windows

Standard Sash window furniture

CHROME SATIN CHROME BRASS ANTIQUE BRASS

FITCH FASTENERS

RING - PULLS

LIFTS

Optional sash window furniture

CHROME SATIN CHROME BRASS ANTIQUE BRASS

ANGEL VENTLOCK

PUSH BUTTON VENTLOCKS

PUSH BUTTON VENTLOCKS

TIMBER WINDOWS DIRECT

Bespoke Wooden Sash & Casement Windows

Casement window furniture

	LEFT HAND	RIGHT HAND	FRICTION HINGE	BUTT HINGES	
CHROME					
SATIN CHROME					
BRASS					
WHITE				**N/A**	
BLACK ANTIQUE					

VERTICAL SECTION OF WINDOW

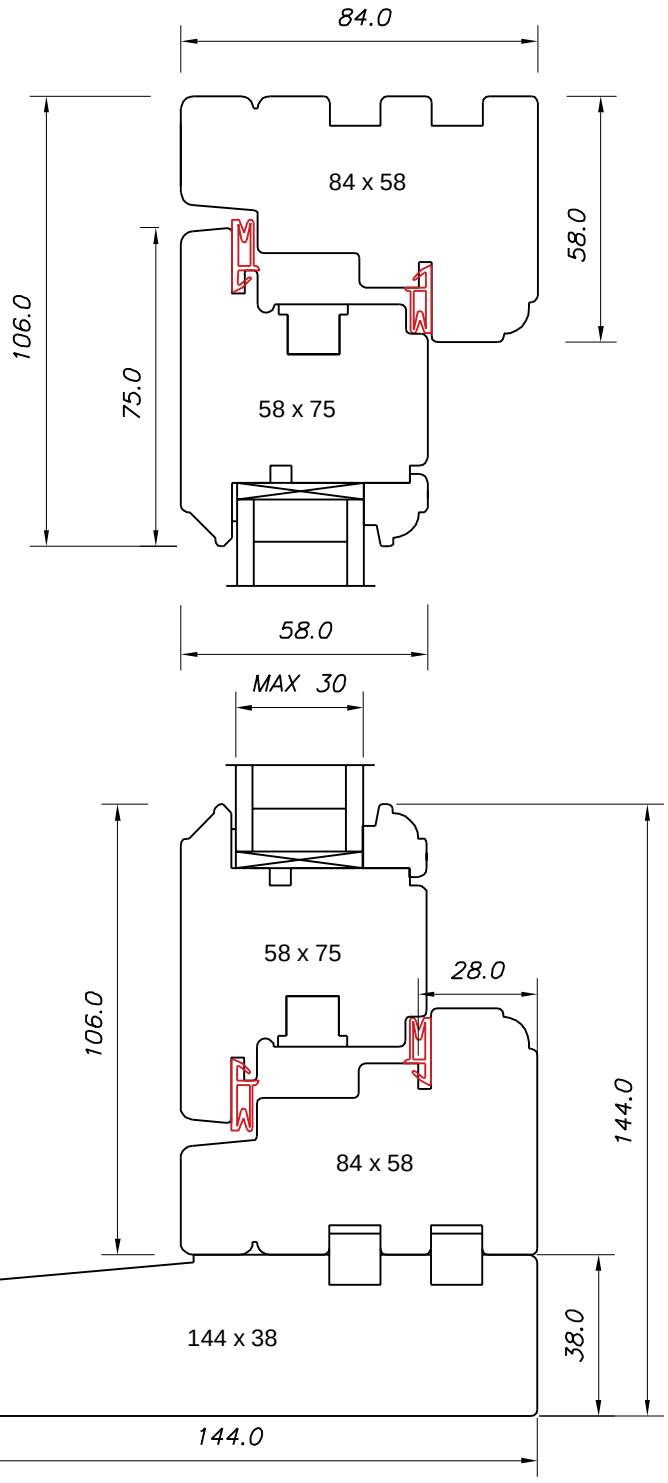

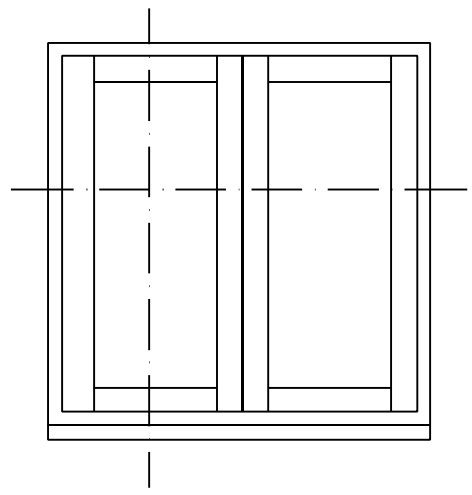

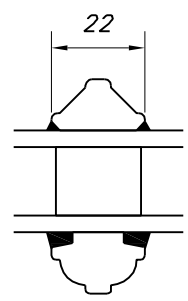

HORIZONTAL SECTION OF WINDOW

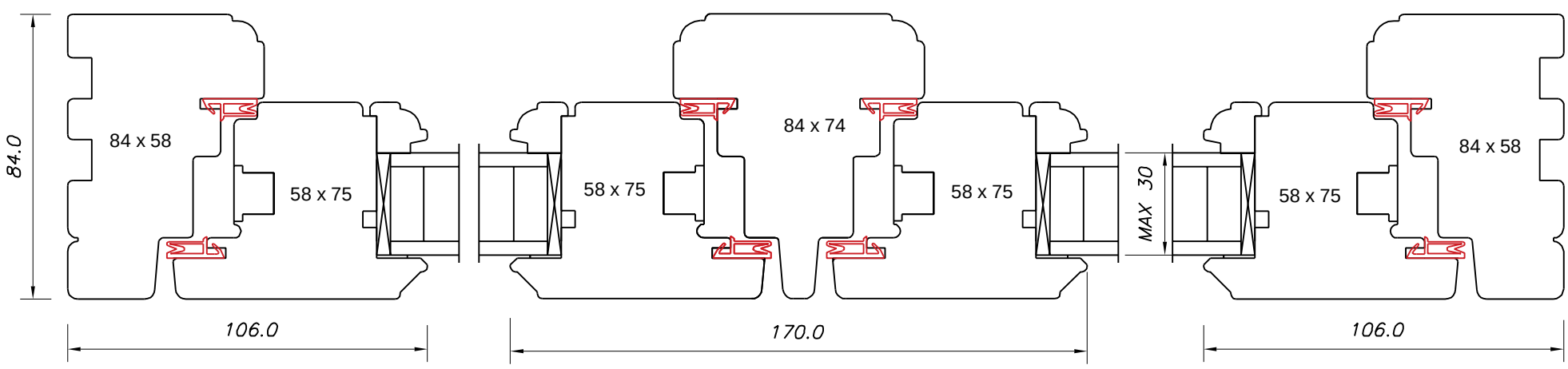

TIMBER WINDOWS DIRECT

Bespoke Wooden Sash & Casement Windows