Etex (Exteriors) UK Ltd
Wellington Road
Burton-upon-Trent
Staffordshire
DE14 2AP

Tel: 01283 501505
e-mail: techuk@etexgroup.com
website: www.cedral.co.uk

Agrément Certificate
06/4299
Product Sheet 2

ETEX (EXTERIORS) UK CLADDING SYSTEM

CEDRAL CLICK SYSTEM

This Agrément Certificate Product Sheet[1] relates to the Cedral Click System, fibre-reinforced cement planks with profiled edges for use as an exterior non-loadbearing decorative and protective cladding over masonry or sheathed timber stud and steel of new and existing buildings.

(1) Hereinafter referred to as 'Certificate'.

CERTIFICATION INCLUDES:

- factors relating to compliance with Building Regulations where applicable
- factors relating to additional non-regulatory information where applicable
- independently verified technical specification
- assessment criteria and technical investigations
- design considerations
- installation guidance
- regular surveillance of production
- formal three-yearly review.

KEY FACTORS ASSESSED

Strength and stability — the system can accept the wind actions likely to be met in service in the UK (see section 6).

Behaviour in relation to fire — the system has a reaction to fire classification of A2-s1,d0 in accordance with BS EN 13501-1 : 2007 and when used in conjunction with timber batten support components is restricted in use (see section 7).

Weathertightness — the system, when installed, is not weathertight, and in sheathed framework applications must be used in conjunction with a suitable breather membrane (see section 8).

Durability — the system is durable and can be expected to have a service life in excess of 30 years (see section 10).

The BBA has awarded this Certificate to the company named above for the system described herein. This system has been assessed by the BBA as being fit for its intended use provided it is installed, used and maintained as set out in this Certificate.

On behalf of the British Board of Agrément

[redacted]

Date of First issue: 28 May 2020

Hardy Giesler
Chief Executive Officer

The BBA is a UKAS accredited certification body – Number 113.
The schedule of the current scope of accreditation for product certification is available in pdf format via the UKAS link on the BBA website at www.bbacerts.co.uk
Readers are advised to check the validity and latest issue number of this Agrément Certificate by either referring to the BBA website or contacting the BBA direct.
Any photographs are for illustrative purposes only, do not constitute advice and should not be relied upon.

British Board of Agrément
Bucknalls Lane
Watford
Herts WD25 9BA
tel: 01923 665300
clientservices@bbacerts.co.uk
www.bbacerts.co.uk
©2020

Regulations

In the opinion of the BBA, the Cedral Click System, if installed, used and maintained in accordance with this Certificate, can satisfy or contribute to satisfying the relevant requirements of the following Building Regulations (the presence of a UK map indicates that the subject is related to the Building Regulations in the region or regions of the UK depicted):

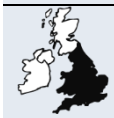

The Building Regulations 2010 (England and Wales) (as amended)

Requirement:	**A1**	**Loading**
Comment:		The system is acceptable for use as set out in sections 6.2 to 6.7 of this Certificate.
Requirement:	**B3 (4)**	**Internal fire spread (structure)**
Comment:		The system can contribute to satisfying this Requirement. See section 7.2 of this Certificate.
Requirement:	**B4(1)**	**External fire spread**
Comment:		The system is unrestricted by this Requirement. See sections 7.1, 7.2, 7.4 and 7.5 of this Certificate.
Requirement:	**C2(b)**	**Resistance to moisture**
Comment:		The system can contribute to satisfying this Requirement. See section 8.1 of this Certificate.
Requirement:	**7(1)**	**Materials and workmanship**
Comment:		The system is acceptable. See section 10.1 and the *Installation* part of this Certificate.
Regulation:	**7(2)**	**Materials and workmanship**
Comment:		The system is unrestricted by this Regulation. See sections 7.1, 7.3 and 7.4 of this Certificate.

The Building (Scotland) Regulations 2004 (as amended)

Regulation:	**8(1)**	**Durability, workmanship and fitness of materials**
Comment:		The system can contribute to a construction satisfying this Regulation. See section 10.1 and the *Installation* part of this Certificate.
Regulation:	**9**	**Building standards applicable to construction**
Standard:	1.1(a)(b)	Structure
Comment:		The system is acceptable, with reference to clause 1.1.1[(1)(2)]. See sections 6.2 to 6.7 of this Certificate.
Standard:	2.4	Cavities
Comment:		The system can contribute to satisfying this Standard with reference to clause 2.4.2[(1)(2)]. See section 7.2 of this Certificate.
Standard:	2.6	Spread to neighbouring buildings
Comment:		The system is unrestricted by this Standard with respect to clauses 2.6.4[(1)(2)], 2.6.5[(1)] and 2.6.6[(2)]. See sections 7.1, 7.4, 7.6 and 7.7 of this Certificate.
Standard:	2.7	Spread on external walls
Comment:		The system is unrestricted by this Standard with respect to clause 2.7.1[(1)(2)]. See sections 7.1, 7.4, 7.6 and 7.7 of this Certificate.

Standard:	3.10	Precipitation
Comment:		The system can contribute to satisfying the Standard with reference to clause 3.10.5[(1)(2)]. See section 8.1 of this Certificate.
Standard:	7.1(a)	Statement of sustainability
Comment:		The system can contribute to satisfying the relevant requirements of Regulation 9, Standards 1 to 6, and therefore will contribute to a construction meeting a bronze level of sustainability as defined in this Standard.
Regulation:	**12**	**Building standards applicable to conversions**
Comment:		Comments in relation to the system under Regulation 9, Standards 1 to 6, also apply to this Regulation, with reference to clause 0.12.1[(1)(2)] and Schedule 6[(1)(2)].

(1) Technical Handbook (Domestic).
(2) Technical Handbook (Non-Domestic).

The Building Regulations (Northern Ireland) 2012 (as amended)

Regulation:	**23(a)(i)(iii)(b)(i)**	**Fitness of materials and workmanship**
Comment:		The system is acceptable. See section 10.1 and the *Installation* part of this Certificate.
Regulation:	**28(b)**	**Resistance to moisture and weather**
Comment:		The system can contribute to satisfying this Regulation. See section 8.1 of this Certificate.
Regulation:	**30**	**Stability**
Comment:		The system can contribute to satisfying this Regulation. See sections 6.2 to 6.7 of this Certificate.
Regulation:	**35(4)**	**Internal fire spread – Structure**
Comment:		The system is unrestricted by this Regulation. See section 7.2 of this Certificate.
Regulation:	**36(a)**	**External fire spread**
Comment:		The system can contribute to satisfying this Regulation. See sections 7.1 to 7.4 of this Certificate.

Construction (Design and Management) Regulations 2015
Construction (Design and Management) Regulations (Northern Ireland) 2016

Information in this Certificate may assist the client, designer (including Principal Designer) and contractor (including Principal Contractor) to address their obligations under these Regulations.

See section: 3 *Delivery and site handling* (3.2 and 3.3) of this Certificate.

Additional Information

CE marking

The Certificate holder has taken the responsibility of CE marking the planks in accordance with harmonised European Standard BS EN 12467 : 2012.

1 Description

1.1 The Cedral Click System comprises Cedral Click planks, which are fibre-reinforced cement planks with profiled edges (see Figure 1) to allow for a tongue and groove fit between panels. The planks satisfy the requirements of Category A, Class 2 boards to BS EN 12467 : 2012.

1.2 Cedral Click planks are available in a smooth or wood-textured finish with the following characteristics.

Thickness (mm)	12
Width (mm)	186
Length (mm)	3600
Approximate mass per unit area ($kg \cdot m^{-2}$)	18.2
Approximate dry density ($kg \cdot m^{-3}$)	1330
Modulus of rupture (MPa)	10.94.

Figure 1 Cedral Click planks

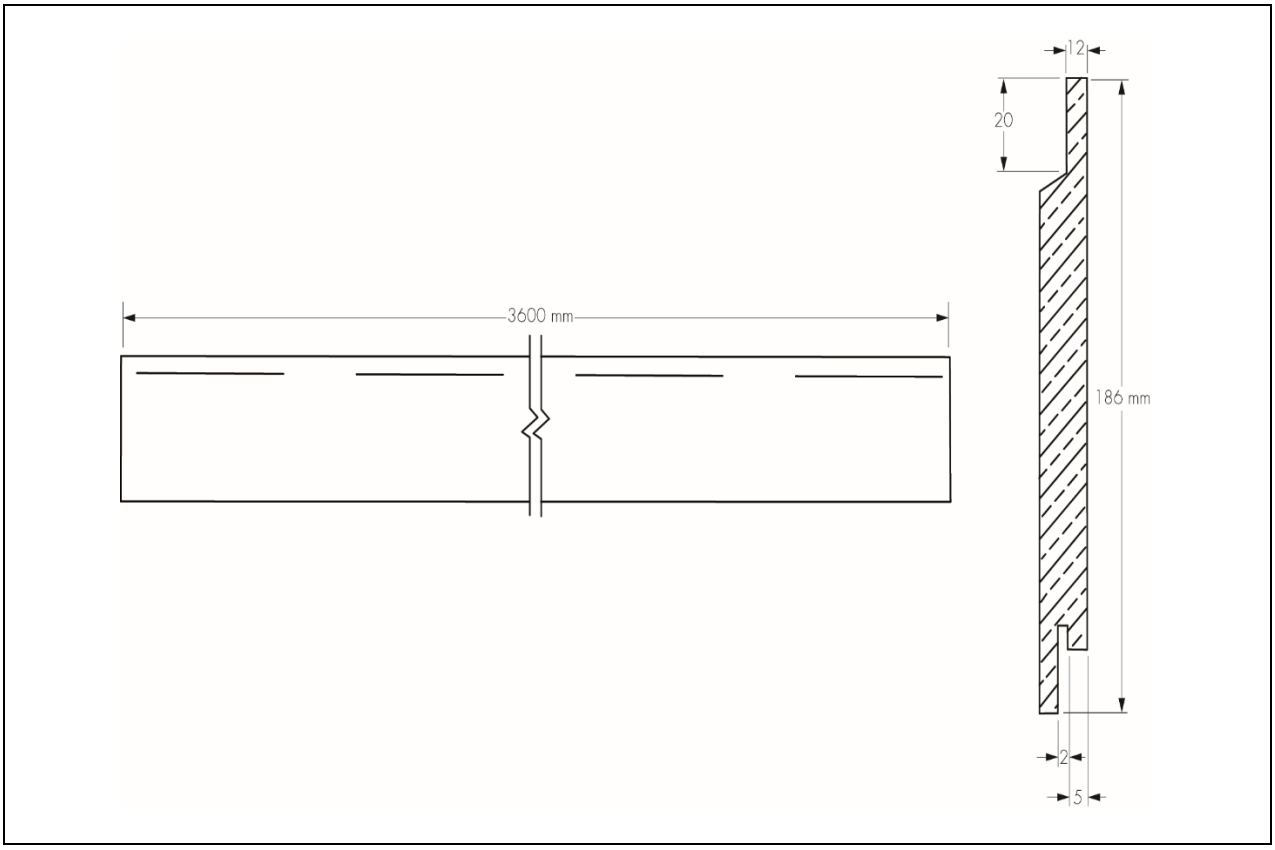

1.3 The planks are fixed back to the substrate by means of stainless steel Cedral Click Clips (see Figure 2) which are attached back to vertical timber battens or metal profiles by means of stainless steel screws (timber) or rivets (metal).

Figure 2 Cedral Click Clips and fixings

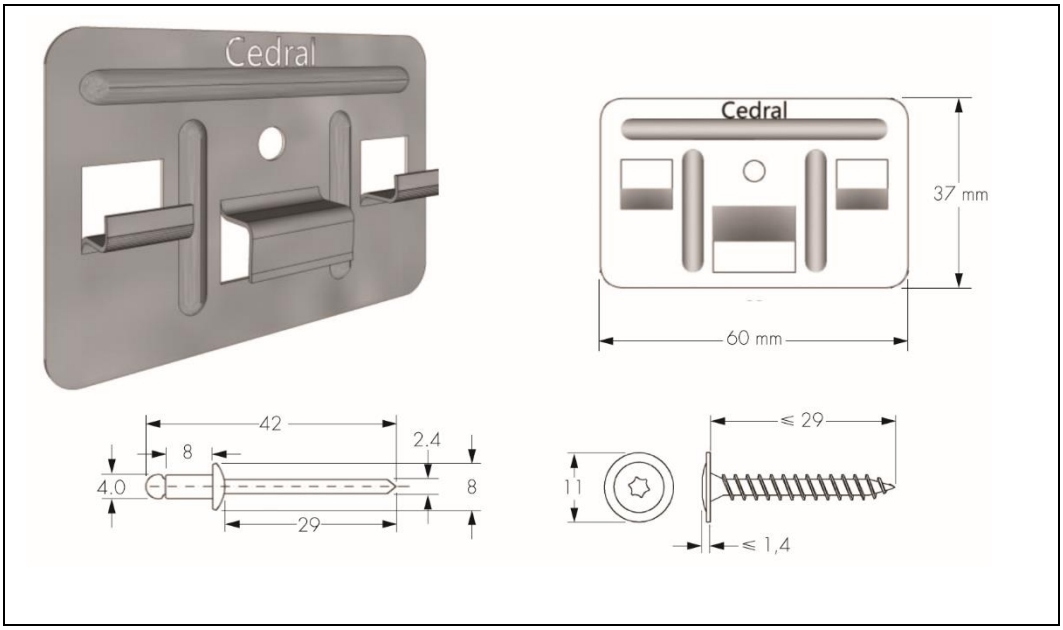

1.4 The planks are supplied factory coated and are available in the following colours: Grey Brown, Atlas Brown, Taupe, Burnt Red, Light Oak, Dark Oak, Cream White, Beige, Sand Yellow, Sage Green, Forest Grey, Dark Brown, White, Silver Grey, Grey, Pearl, Pewter, Black, Grey Green, Blue Grey, Violet Blue, Dark Grey and Slate Grey.

1.5 Ancillary items for use with the system are:

- stainless steel screws — for fixing to timber batten supports
- stainless steel rivets — for fixing to metal supports.

1.6 Other ancillary items which may be used with the system, but which are outside the scope of this Certificate, are:

- metal support subframe — galvanized steel z-profiles
- timber support subframe — minimum 38 by 75 mm, C16 grade timber battens
- aluminium profiles — asymmetric external corner, symmetric external corner, internal corner, connection profile, end profile, starter profile and perforated closure (suitable for metal or wood subframes)
- breather membrane
- touch-up paint (in 0.5 litre quantities)
- EPDM or alternative UV resistant protective strip to prevent moisture ingress, when the system is fixed onto timber battens
- polyurethane strip — 50 mm width, only when the system is fixed into a timber-frame
- insulation within the cavity.

2 Manufacture

2.1 The planks are manufactured by a batch-blending operation by the Hatschek process and high-pressure steam autoclaving. In a separate process, the cured, sanded planks are sprayed with an acrylic-based paint finish, prior to packaging and storing.

2.2 As part of the assessment and ongoing surveillance of product quality, the BBA has:

- agreed with the manufacturer the quality control procedures and product testing to be undertaken
- assessed and agreed the quality control operated over batches of incoming materials
- monitored the production process and verified that it is in accordance with the documented process
- evaluated the process for management of nonconformities
- checked that equipment has been properly tested and calibrated
- undertaken to carry out the above measures on a regular basis through a surveillance process, to verify that the specifications and quality control operated by the manufacturer are being maintained.

2.3 The management system of the manufacturer, Eternit N.V, has been assessed and registered as meeting the requirements of BS EN ISO 9001 : 2015 by SGS (Certificate BE 92/021057.01).

3 Delivery and site handling

3.1 The planks are delivered to site on wrapped pallets. The pallets can only be offloaded by mechanical handling equipment; individual planks can be offloaded manually. Cedral Click Clips are supplied in boxes of 250.

3.2 To avoid surface damage during handling, one plank must not be dragged over the surface of the other. Planks should be lifted off the stack. Planks must be carried on their edges but must not be stored on edge.

3.3 Planks should be stored on a dry, level surface on the pallets on which they are supplied. They must be protected from the weather. Stacks of loose planks must not exceed 1 m in height and should be stored on bearers at a maximum of 400 mm centres.

Assessment and Technical Investigations

The following is a summary of the assessment and technical investigations carried out on the Cedral Click System.

Design Considerations

4 Use

4.1 The Cedral Click System is satisfactory for use as a decorative and protective exterior cladding fixed horizontally over timber-frame, steel-frame or masonry substrate walls. When installed onto timber-frame, the system will be subject to height restrictions (see section 7).

4.2 The designer must ensure that the strength and integrity of the intended substrate wall is commensurate with that required of the cladding system (see sections 4.3 and 4.4).

4.3 Brickwork or blockwork walls must be constructed in accordance with the relevant sections of BS EN 1996-1-1 : 2005, BS EN 1996-1-2 : 2005, BS EN 1996-2 : 2006 and BS EN 1996-3 : 2006, and their UK National Annexes, BS 8000-0 : 2014, BS 8000-3 : 2001 and either PD 6697 : 2019 or one of the technical specifications given in the relevant national Building Regulations.

4.4 Timber-frame walls must be constructed in accordance with the relevant sections of BS EN 1995-1-1 : 2004 and BS EN 1995-1-2 : 2004, and their UK National Annexes, workmanship in accordance with BS 8000-5 : 1990, and preservative treated in accordance with BS 8417 : 2011 and BS EN 351-1 : 2007. Guidance on recommended wood preservation is also given in *NHBC Standards* 2020, Part 3 *General*, Chapter 3.3 *Timber preservation (natural solid timber)*.

4.5 Steel frame walls must be constructed in accordance with the relevant sections of BS EN 1993-1-1 : 2005 and BS EN 1993-1-2 : 2005, and their UK National Annexes. The installation of vertical support rails must be aligned and fixed directly to the vertical structural metal framework.

4.6 Studding and framing should be adequately supported by noggings to ensure rigidity.

4.7 In accordance with the Certificate holder's guidance, the installation must maintain a minimum 30 mm cavity behind the cladding (from the most rear part of the cladding to the substructure, or insulation if installed within the cavity), with minimum 10,000 mm^2 ventilation slots per metre wall length, in accordance with BS 5250 : 2011. Additional guidance on recommended cavity widths is given in *NHBC Standards* 2020, Part 6 *Superstructure (excluding roofs)*, Chapter 6.9 *Curtain walling and cladding*.

5 Practicability of installation

The system is designed to be installed by a competent general builder or contractor experienced with this type of system.

6 Strength and Stability

6.1 The substrate wall and cladding support structure must be capable of transferring all additional loading due to the installation of the cladding system to the ground in a satisfactory manner. The adequacy of the substrate and cladding support structure must be verified by the person or party responsible for the global stability of the building to which the system is applied. Any defects should be made good prior to the system being installed.

Wind loading

6.2 The wind actions on the walls should be calculated, taking into account all relevant factors such as location and topography, in accordance with BS EN 1991-1-4 : 2005 and its UK National Annex. All the factors affecting wind actions on each elevation and specific zone of the building must be considered. In accordance with BS EN 1990 : 2002 and its UK National Annex, a partial load factor of 1.5 must be applied to the characteristic values determined from BS EN 1991-1-4 : 2005 to establish the design wind load to be resisted by the system.

6.3 Installations correctly designed in accordance with this Certificate will safely accommodate the applied design loads due to the self-weight of the system, wind and impact.

6.4 The designer should ensure that the fixing of the support brackets to the substrate wall has adequate tensile pull-out strength and corrosion resistance (outside the scope of this Certificate). An appropriate number of site-specific pull-out tests must be conducted on the substrate wall to determine the minimum pull-out resistance to failure of the fixings. The characteristic pull-out resistance should be determined in accordance with the guidance given in EOTA TR055, using 50% of the mean value of the five smallest measured values at the ultimate load.

6.5 A dynamic wind uplift (DWU) test was carried out on the system installed onto vertical metal profiles ('Z' galvanized steel rails) at 600 mm horizontal centres. The Cedral Click planks were fastened to the vertical metal profiles via the metal Cedral Click Clips and metal rivets (as described in section 1.3). The design wind load resistance of the system as determined from the DWU test is 1.3 $kN \cdot m^{-2}$[(1)(2)].

(1) The design wind load of the system corresponds to the maximum allowed spacing of fixings and profiles, as described in section 6.5. This fixing and profile configuration, with appropriately selected fixings, can also adequately transfer the product's self-weight, wind and impact loads to a suitable substrate wall.
(2) The design wind resistance is determined by dividing the ultimate value obtained from a DWU test by a partial factor of 2.0.

6.6 The horizontal local deflection of the supporting structure due to variable loads should be within acceptable limits. The maximum mid-span deflection must not exceed L/200, and cantilever deflections L/150, in accordance with BS EN 1995-1-1 : 2004, where L is the span spacing between supports.

Impact resistance

6.7 A system comprising 12 mm thick Cedral Click planks (measuring 3600 by 186 mm), attached via Cedral Click Clips to vertical metal profiles spaced at 600 mm horizontal centres, was tested for resistance to hard and soft body impacts. The system was found to be susceptible to damage from impacts, and it is recommended that its use is limited to locations where there is little possibility of such impacts. The test results demonstrate that the Cedral Click System is suitable for use in Use Categories III and IV, as defined in EAD 090062-00-0404, Table G.2, an extract of which is shown in Table 1 of this Certificate.

Table 1 Impact Use Categories

Category	Description	Examples
I	A zone readily accessible at ground level to the public and vulnerable to hard body impacts but not subjected to abnormally rough use	Façade bases in buildings sited in public locations, such as squares, schoolyards or parks
II	A zone liable to impacts from thrown or kicked objects, but in public locations where the height of the kit will limit the size of the impact; or at lower levels where access to the building is primarily to those with some incentive to exercise care	Façade bases in buildings not sited in public locations (eg squares, schoolyards, parks) or upper façade levels in buildings sited in public locations that occasionally can be hit by a thrown object (eg ball, stone, etc)
III	A zone not likely to be damaged by normal impacts caused by people or by thrown or kicked objects	Upper façade levels in buildings (not including base) not sited in public locations that occasionally can be hit by a thrown object (eg ball, stone, etc)
IV	A zone out of reach from ground level	High façade levels that cannot be hit by a thrown object

Note: Categories I and II are shown for information only and are not suitable for this system.

7 Behaviour in relation to fire

7.1 Cedral Click planks have an A2-s1, d0 classification in accordance with BS EN 13501-1 : 2007. This relates to the thickness and colour range referred to in section 1 of this Certificate, as per the reaction to fire classification report number 15090D issued by Warringtonfireagent.

7.2 The reverse side of the plank (facing into the cavity) has a reaction to fire classification of A2-s1, d0 to BS EN 13501-1 : 2007.

7.3 The fixings and metal support system are classified as non-combustible in accordance with the relevant national regulatory guidance. The timber battens supports are not classified as non-combustible or limited combustibility in accordance with the relevant national regulatory guidance.

7.4 The system is not subject to any restriction on building height or proximity to boundaries, except in the circumstances detailed in sections 7.5 to 7.7.

7.5 Where timber battens are used as a support system in England and Wales, the system should not be used on buildings that have a storey at least 18 m above ground level and contain: one or more dwellings, an institution, a room for residential purposes (excluding any room in a hostel, hotel or boarding house), student accommodation, care homes, sheltered housing, hospitals or dormitories in boarding schools.

7.6 In Scotland, the system when used with timber battens as a support system are not classified as non-combustible and may be used on buildings more than 1 m from a boundary and on houses 1 m or less from a boundary. With minor exceptions, the panels should be included in calculations of unprotected area, except on houses where the external wall behind has the appropriate fire resistance.

7.7 In Scotland, the system, when used with timber battens as a support system, should not be used on buildings with a storey more than 11 m above the ground, or on any entertainment or assembly building with a total storey area more than 500 m^2, or on any hospital or residential care building with a total storey area more than 200 m^2.

7.8 Designers should refer to the relevant national Building Regulation guidance for detailed conditions of use, particularly in respect of requirements for substrate fire performance, cavity barriers, service penetrations and combustibility limitations for other materials and components used in the overall wall construction, for example, timber battens or thermal insulation, which are outside the scope of this Certificate.

8 Weathertightness

8.1 The system is not weathertight and when used on timber- or steel-frame walls must be backed by a breather membrane in conjunction with sheathing boards acting as a vapour-permeable water barrier (see section 1.5), incorporated behind the cladding under the supporting battens or metal subframe. This barrier must satisfy the requirements of BS 5250 : 2011.

8.2 Where the system is used as a decorative facing attached to weathertight masonry walls, an additional waterproofing layer is not necessary as the amount of water that will penetrate the cladding will be small and will not have an adverse effect on the wall. See section 4.3 of this Certificate and BRE Report BR 262 : 2002.

8.3 If the system is used in the renovation of an existing masonry wall which is structurally sound but not fully weathertight, a vapour-permeable membrane should be installed.

8.4 The joints between planks are not sealed but the amount of water entering the cavity by wind-driven rain will be minimal. Any water collecting in the cavity owing to rain or condensation will be removed by drainage and ventilation.

8.5 Provision must always be made to allow water that has penetrated behind the cladding to drain away. A minimum of 10,000 mm^2 ventilation per metre wall length must be provided at the top and bottom of the installation.

8.6 The clear cavity between the back of the system and the supporting wall (or insulation if installed within the cavity) must be at least 30 mm.

9 Maintenance

Periodic inspections should be carried out to assess the need for cleaning, maintenance painting, localised repairs and replacement of elements, such as joint seals and fixings. Advice regarding re-coating (outside the scope of this Certificate) and maintenance procedures can be obtained from the Certificate holder.

Note: Care must be taken to ensure that re-coating (outside the scope of this Certificate) does not reduce the required reaction to fire classification.

10 Durability

10.1 When installed in accordance with this Certificate and the Certificate holder's instructions, and subjected to normal conditions of exposure and use, the product will have a service life in excess of 30 years.

10.2 In common with other cementitious materials (eg masonry blocks), the fibre-cement planks can become brittle with time. This can be minimised by regular maintenance painting.

10.3 Care must be taken to ensure that objects such as ladders are not repeatedly leant or rubbed against the planks.

10.4 The factory applied paint finish has a satisfactory colour stability for up to 15 years. Extensive exposure to sunlight will cause some fading of the surface colour. The extent of the fading will depend upon the colour chosen, environment, location and aspect.

Installation

11 General

11.1 The Cedral Click system is installed on external timber-frame, steel-frame or masonry walls in accordance with the provisions of this Certificate and the Certificate holder's instructions, by suitably experienced and trained personnel. Full installation details are given in the Certificate holder's Installation Manual. Typical installation details are shown in Figures 3 and 4.

11.2 Planks can be cut using a fine-tooth tungsten carbide handsaw, diamond-dusted handsaw, power saw or guillotine.

Figure 3 Typical window details

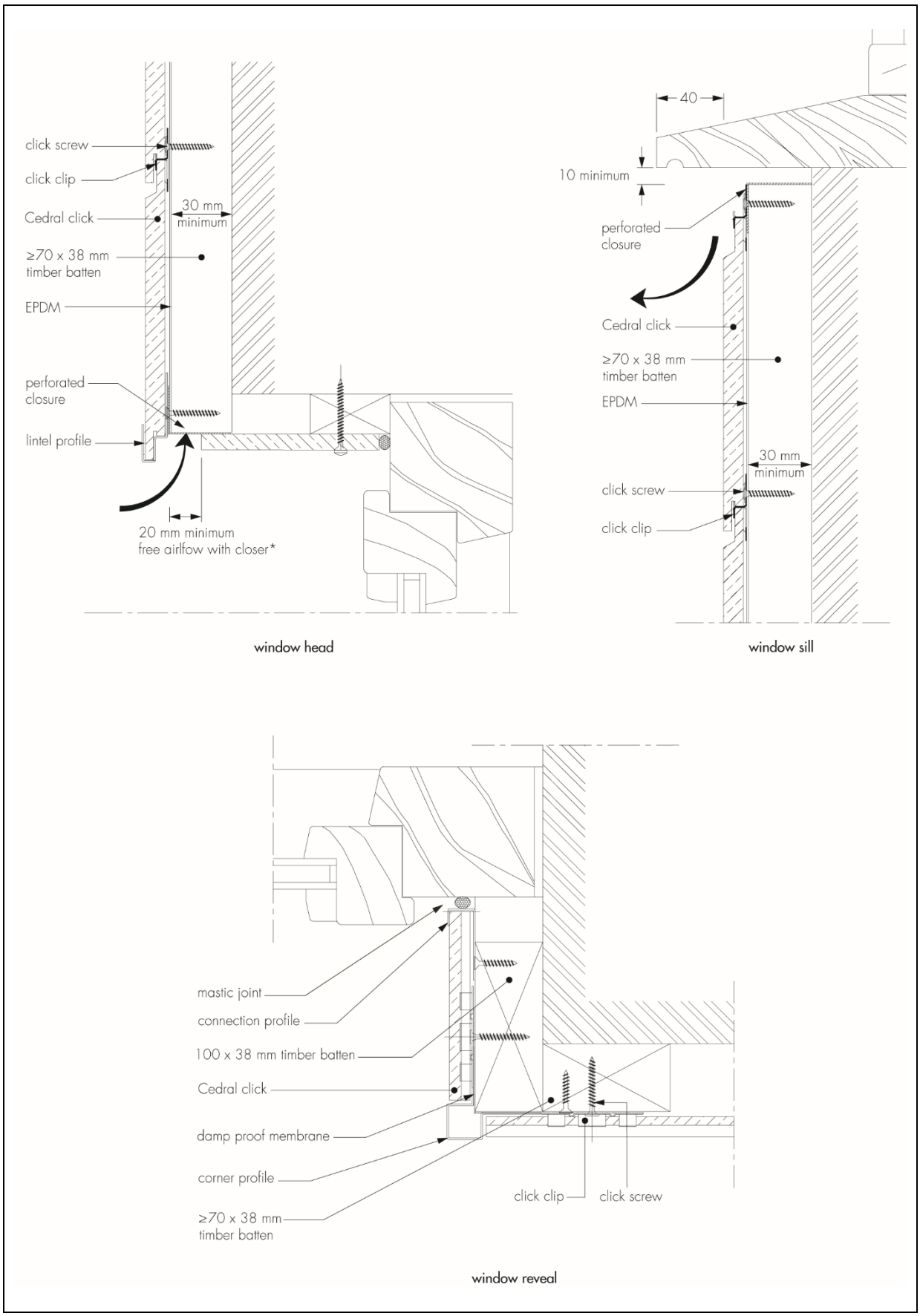

Figure 4 Typical corner details

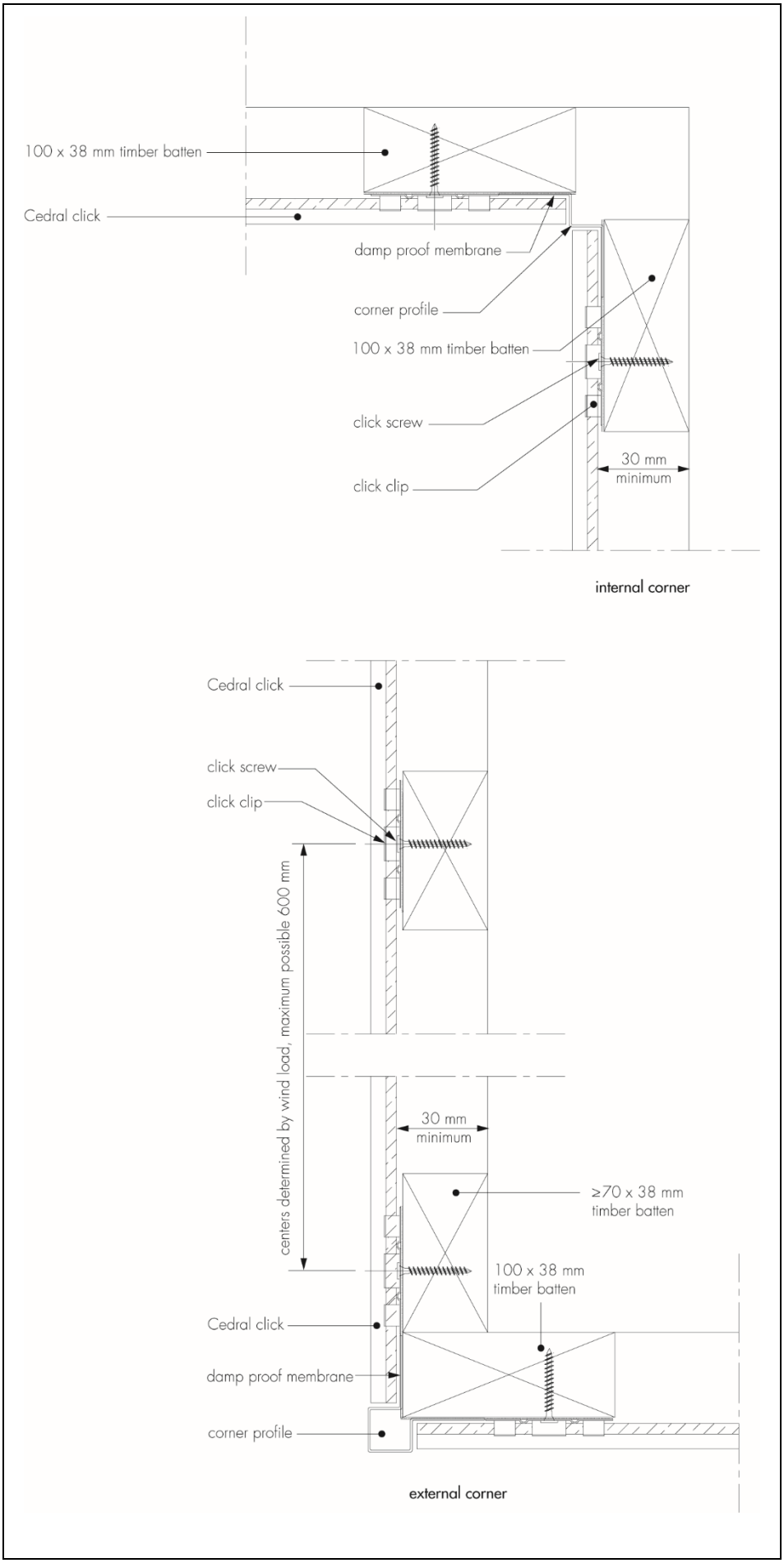

12 Procedure

12.1 Where required, a breather membrane is laid parallel to the direction of the planks along the wall and behind the timber-frame, with minimum overlaps of 150 mm.

12.2 Support timber battens or metal profiles are fixed over the breather membrane at a maximum of 600 mm centres, in accordance with section 4.6.

12.3 A ventilation gap of at least 30 mm (see section 4.7) must be provided between the back of the planks and the substrate wall or external wall insulation (if installed within the cavity). Assembly of the cladding system is carried out starting from the bottom of the external wall. A starter profile and perforated closure are fitted at the base of the installation. The starter profile must be completely level. The perforated closure is also installed above and below window and door heads and at the top of the cladding section.

12.4 The first Cedral Click plank is fitted onto the starter profile. Cedral Click Clips are aligned to the tops of the plank and are fixed onto every vertical support. The next Cedral Click plank is then fitted on top of the first plank and is attached to the vertical supports via the Click Clips by the same method.

12.5 The planks are placed with the ends against each other. The ends must always be on top of an underlying vertical support batten/rail.

13 Repair

Under normal conditions of use, the system is unlikely to suffer damage, but should it occur, repairs can be carried out by replacement of damaged planks. This may require the temporary removal of undamaged planks above the damaged area. Detailed repair instructions are available from the Certificate holder.

Technical Investigations

14 Tests

14.1 As assessment was made of data to BS EN 12467 : 2012 in relation to:

- dimensions
- bending strength
- apparent density
- resistance to freeze/thaw
- resistance to water soak
- resistance to soak/dry cycling
- resistance to heat/rain cycling
- water impermeability.

14.2 Tests were carried out and the results assessed to determine:

- water absorption
- resistance to hard and soft body impacts
- resistance to dynamic wind loading.

15 Investigations

15.1 The manufacturing process was evaluated, including the methods adopted for quality control, and details were obtained of the quality and composition of the materials used.

15.2 As assessment was made of existing test reports in relation to:

- reaction to fire
- resistance to hard and soft body impact

- pull-through of fixings
- resistance to wind loading
- resistance of grooved cladding element
- resistance of metal clips
- resistance to UV ageing
- adhesion of paints to substrate
- resistance to chemicals, marking and staining.

Bibliography

BRE Report BR 262 : 2002 *Thermal insulation : avoiding risks*

BS 5250 : 2011 + A1 : 2016 *Code of practice for control of condensation in buildings*

BS 8000-0 : 2014 *Workmanship on construction sites — Introduction and general principles*
BS 8000-3 : 2001 *Workmanship on construction sites — Code of practice for masonry*
BS 8000-5 : 1990 *Workmanship on construction sites — Code of practice for carpentry, joinery and general fixings*

BS 8417 : 2011 + A1 : 2014 *Preservation of wood — Code of practice*

BS EN 351-1 : 2007 *Durability of wood and wood-based products — Preservative-treated solid wood — Classification of preservative penetration and retention*

BS EN 1990 : 2002 + A1 : 2005 *Eurocode — Basis of structural design*
NA to BS EN 1990 : 2002 + A1 : 2005 UK National Annex to *Eurocode — Basis of structural design*

BS EN 1991-1-4 : 2005 + A1 : 2010 *Eurocode 1 — Actions on structures — General actions*
NA to BS EN 1991-1-4 : 2005 + A1 : 2010 UK National Annex to *Eurocode 1 — Actions on structures — General actions*

BS EN 1993-1-1 : 2005 + A1 : 2014 *Eurocode 3 — Design of steel structures — General rules and rules for buildings*
NA + A1 : 2014 to BS EN 1993-1-1 : 2005 + A1 : 2014 UK National Annex to *Eurocode 3 — Design of steel structures — General rules and rules for buildings*
BS EN 1993-1-2 : 2005 *Eurocode 3 — Design of steel structures — General rules — Structural fire design*
NA to BS EN 1993-1-2 : 2005 UK National Annex to *Eurocode 3 — Design of steel structures — General rules — Structural fire design*

BS EN 1995-1-1 : 2004 + A2 : 2014 *Eurocode 5 — Design of timber structures — General — Common rules and rules for buildings*
NA to BS EN 1995-1-1 : 2004 + A2 : 2014 UK National Annex to *Eurocode 5 — Design of timber structures — General — Common rules and rules for buildings*
BS EN 1995-1-2 : 2004 *Eurocode 5 — Design of timber structures — General — Structural fire design*
NA to BS EN 1995-1-2 : 2004 UK National Annex to *Eurocode 5 — Design of timber structures — General — Structural fire design*

BS EN 1996-1-1 : 2005 + A1 : 2012 *Eurocode 6 — Design of masonry structures — General rules for reinforced and unreinforced masonry structures*
NA to BS EN 1996-1-1 : 2005 + A1 : 2012 UK National Annex to *Eurocode 6 — Design of masonry structures — General rules for reinforced and unreinforced masonry structures*
BS EN 1996-1-2 : 2005 *Eurocode 6 — Design of masonry structures — General rules — Structural fire design*
NA to BS EN 1996-1-2 : 2005 UK National Annex to *Eurocode 6 — Design of masonry structures — General rules — Structural fire design*
BS EN 1996-2 : 2006 *Eurocode 6 — Design of masonry structures — Design considerations, selection of materials and execution of masonry*
NA to BS EN 1996-2 : 2006 UK National Annex to *Eurocode 6 — Design of masonry structures — Design considerations, selection of materials and execution of masonry*
BS EN 1996-3 : 2006 *Eurocode 6 — Design of masonry structures —Simplified calculation methods for unreinforced masonry structures*
NA to BS EN 1996-3 : 2006 UK National Annex to *Eurocode 6 — Design of masonry structures —Simplified calculation methods for unreinforced masonry structures*

BS EN 12467 : 2012 + A2 : 2018 *Fibre-cement flat sheets — Product specification and test methods*

BS EN 13501-1 :2007 + A2 : 2009 *Fire classification of construction products and building elements — Classification using data from reaction to fire test*

BS EN ISO 9001 : 2015 *Quality management systems — Requirements*

PD 6697 : 2019 *Recommendations for the design of masonry structures to BS EN 1996-1-1 and BS EN 1996-2*

EAD 090062-00-0404 : 2001 *Kits for external wall claddings mechanically fixed*

EOTA TR055 *Design of fastenings based on EAD 330232-00-0601, EAD 330499-00-0601 and EAD 330747-00-06-01*

16 Conditions

16.1 This Certificate:

- relates only to the product/system that is named and described on the front page
- is issued only to the company, firm, organisation or person named on the front page – no other company, firm, organisation or person may hold or claim that this Certificate has been issued to them
- is valid only within the UK
- has to be read, considered and used as a whole document – it may be misleading and will be incomplete to be selective
- is copyright of the BBA
- is subject to English Law.

16.2 Publications, documents, specifications, legislation, regulations, standards and the like referenced in this Certificate are those that were current and/or deemed relevant by the BBA at the date of issue or reissue of this Certificate.

16.3 This Certificate will remain valid for an unlimited period provided that the product/system and its manufacture and/or fabrication, including all related and relevant parts and processes thereof:

- are maintained at or above the levels which have been assessed and found to be satisfactory by the BBA
- continue to be checked as and when deemed appropriate by the BBA under arrangements that it will determine
- are reviewed by the BBA as and when it considers appropriate.

16.4 The BBA has used due skill, care and diligence in preparing this Certificate, but no warranty is provided.

16.5 In issuing this Certificate the BBA is not responsible and is excluded from any liability to any company, firm, organisation or person, for any matters arising directly or indirectly from:

- the presence or absence of any patent, intellectual property or similar rights subsisting in the product/system or any other product/system
- the right of the Certificate holder to manufacture, supply, install, maintain or market the product/system
- actual installations of the product/system, including their nature, design, methods, performance, workmanship and maintenance
- any works and constructions in which the product/system is installed, including their nature, design, methods, performance, workmanship and maintenance
- any loss or damage, including personal injury, howsoever caused by the product/system, including its manufacture, supply, installation, use, maintenance and removal
- any claims by the manufacturer relating to CE marking.

16.6 Any information relating to the manufacture, supply, installation, use, maintenance and removal of this product/system which is contained or referred to in this Certificate is the minimum required to be met when the product/system is manufactured, supplied, installed, used, maintained and removed. It does not purport in any way to restate the requirements of the Health and Safety at Work etc. Act 1974, or of any other statutory, common law or other duty which may exist at the date of issue or reissue of this Certificate; nor is conformity with such information to be taken as satisfying the requirements of the 1974 Act or of any statutory, common law or other duty of care.

British Board of Agrément
Bucknalls Lane
Watford
Herts WD25 9BA
tel: 01923 665300
clientservices@bbacerts.co.uk
www.bbacerts.co.uk
©2020