6 Park Crescent, Emsworth. PO107NT – Pergola.

Drawing 5: Manufacturer's Drawing A.

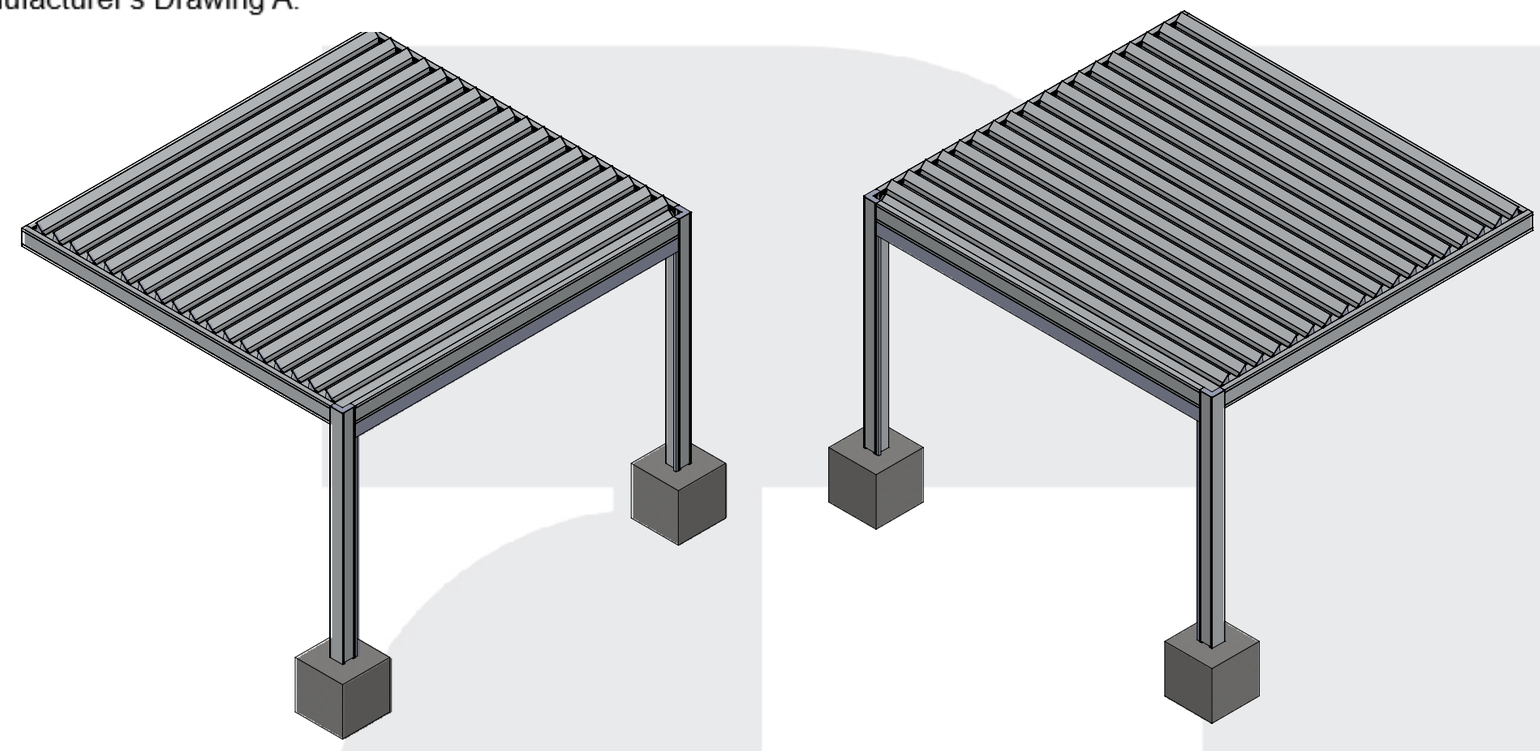

Colour	RAL7016 - Anthracite Grey
Width	4420mm
Length	4066mm
Height	2760mm
Louvre Qty	18
Louvre Colour	
Post Qty.	2
Motor Position	Rear LHS
Perimeter LED Lighting	Yes
Pergola - Sensor	None
Pergola - Remote Control Requirements	Pergola, Lighting & Zip Screen Blinds (TBC)
Sliding Doors	No
Fixed Glass Panels	No
Solid Aluminium Panel System	No
Zip Blind	Front
Base Plate	Concealed

www.morvelle.com

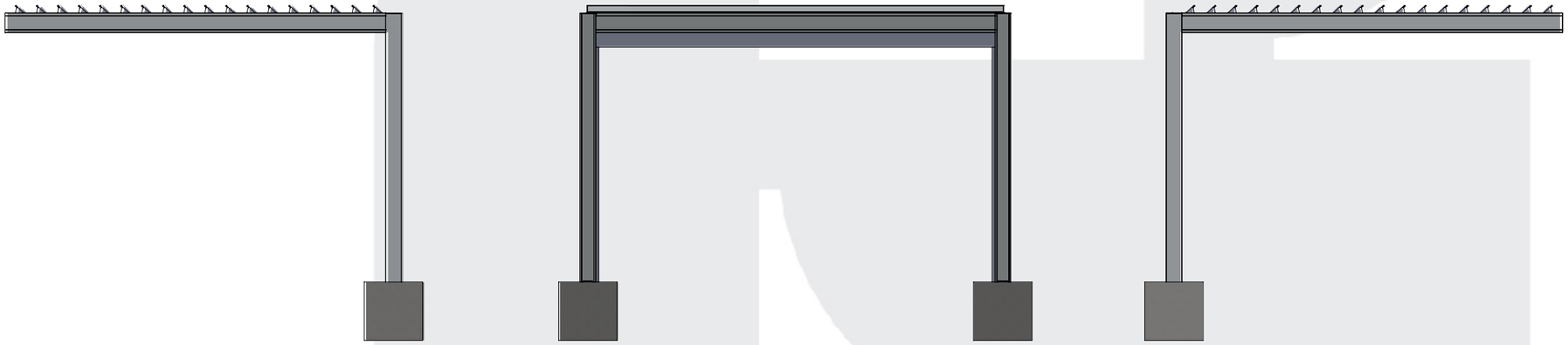

LEFT SIDE VIEW
SCALE 1 : 55

FRONT VIEW
SCALE 1 : 55

RIGHT SIDE VIEW
SCALE 1 : 55

MORVELLE

Installer: Amanda's Verandas		Signature	Rev No: 1
Date: 10.11.26	Drawn By: AA	Unit: Millimeter	**A3**

6 Park Crescent, Emsworth. PO107NT – Pergola.

Drawing 6: Manufacturer's Drawing B.

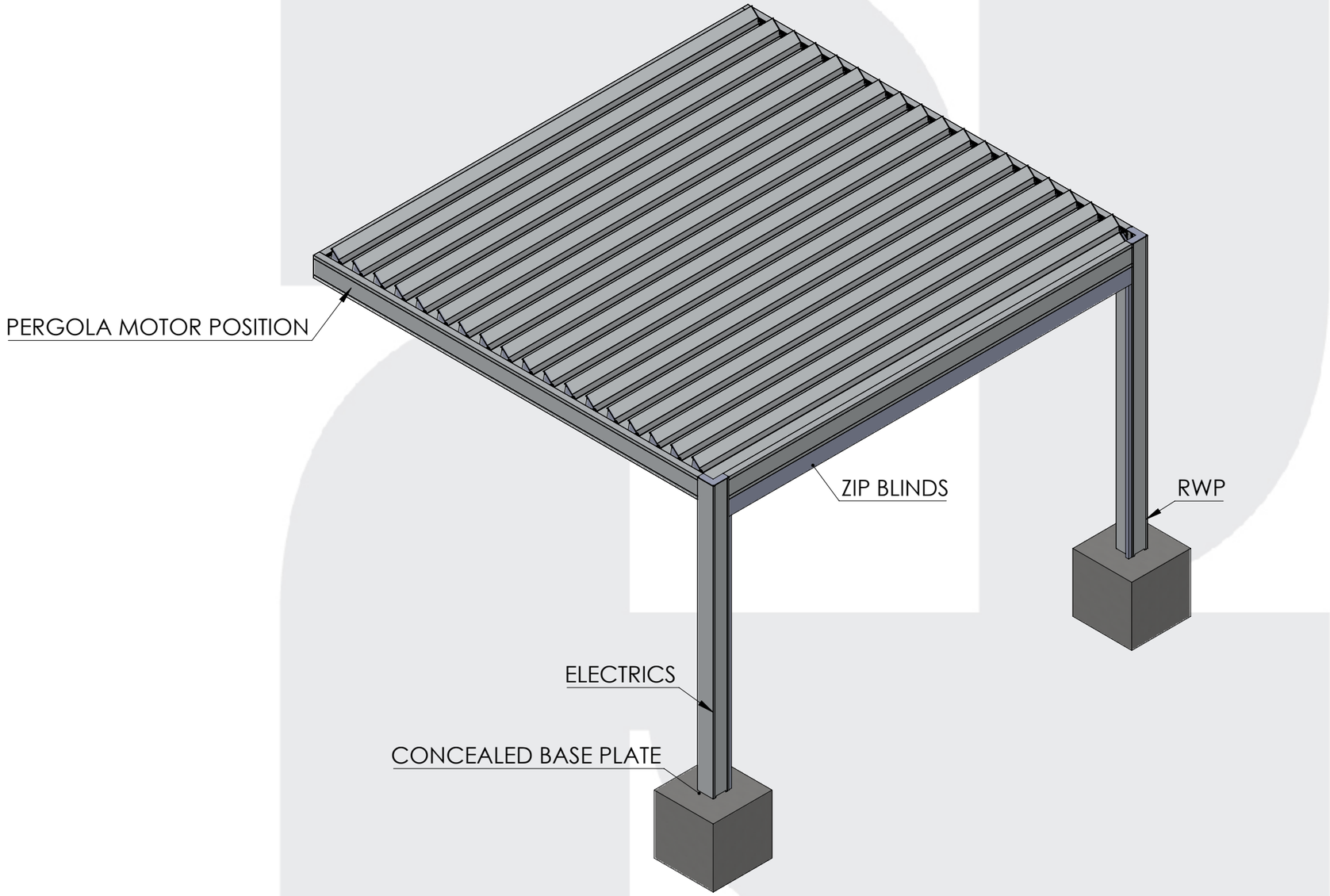

www.morvelle.com

MORVELLE

Installer: Amanda's Verandas		Signature	Rev No: 1
Date: 10.11.26	Drawn By: AA	Unit: Millimeter	**A3**

6 Park Crescent, Emsworth. PO107NT – Pergola.

Drawing 7: Manufacturer's Drawing C.

www.morvelle.com

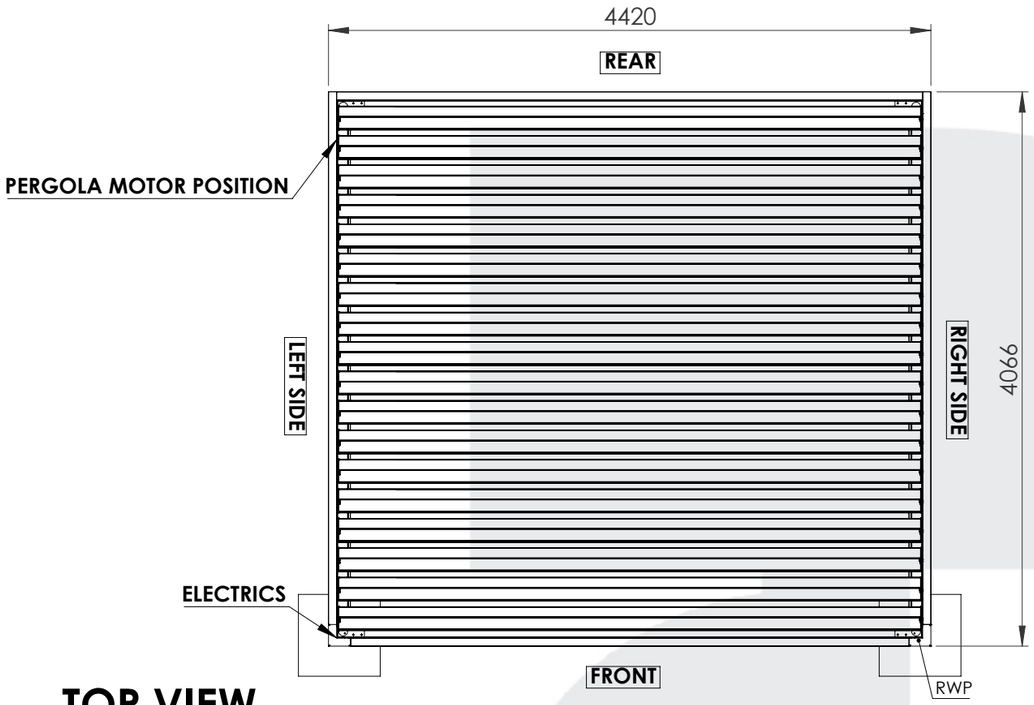

TOP VIEW
SCALE 1 : 45

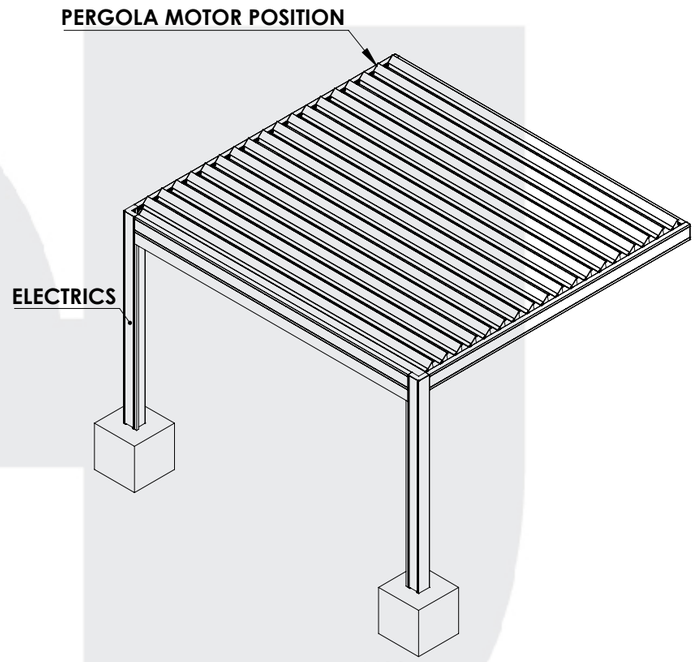

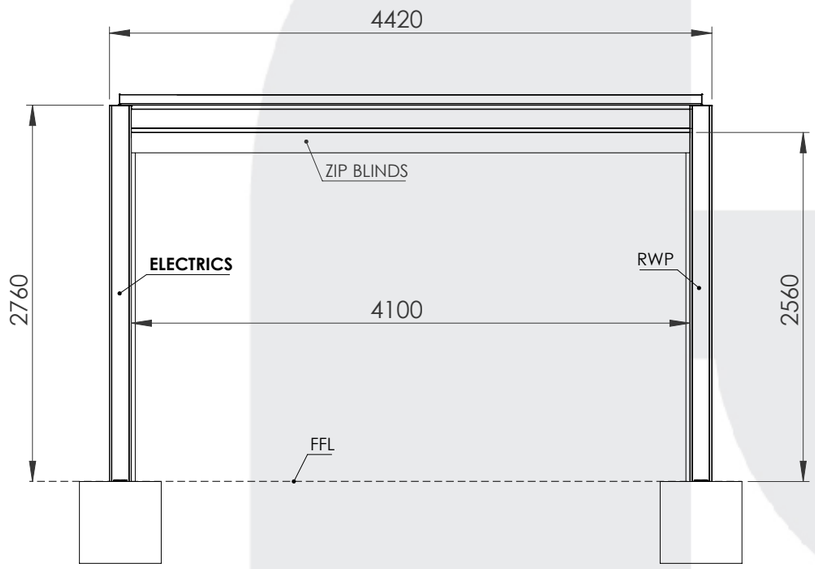

FRONT VIEW (Viewed From Outside)
SCALE 1 : 45

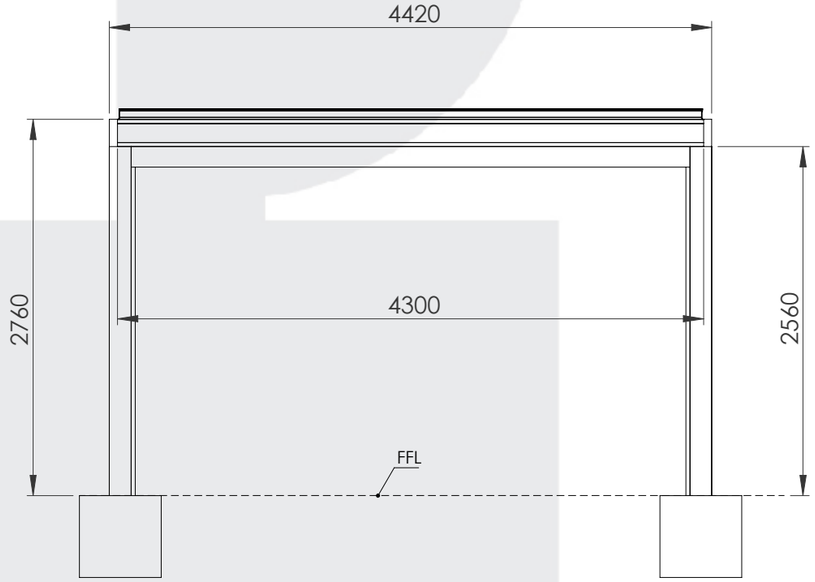

REAR VIEW (Viewed From Inside)
SCALE 1 : 45

MORVELLE

Installer:		Signature	Rev No:
Amanda's Verandas			1
Date: 10.11.26	Drawn By: AA	Unit: Millimeter	**A3**

6 Park Crescent, Emsworth. PO107NT – Pergola.

Drawing 8: Manufacturer's Drawing D.

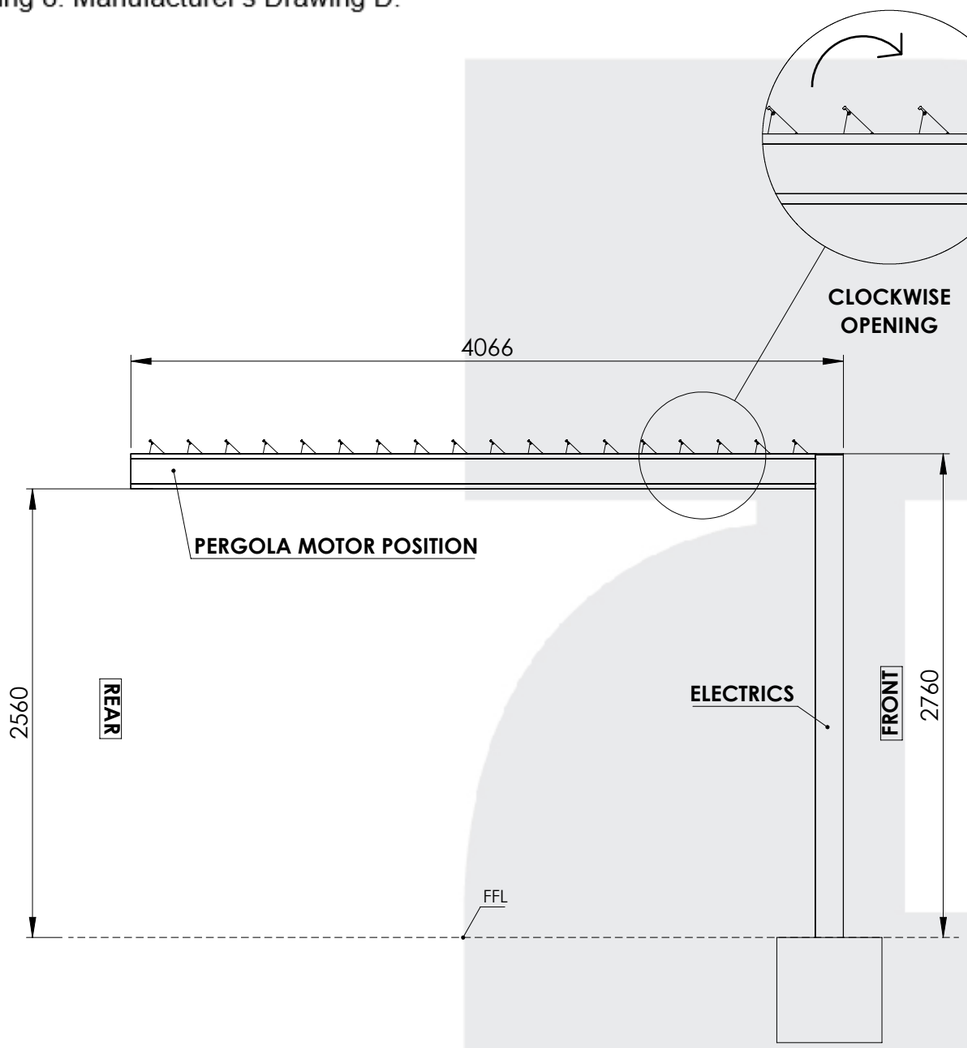

LEFT SIDE VIEW (Viewed From Outside)
SCALE 1 : 35

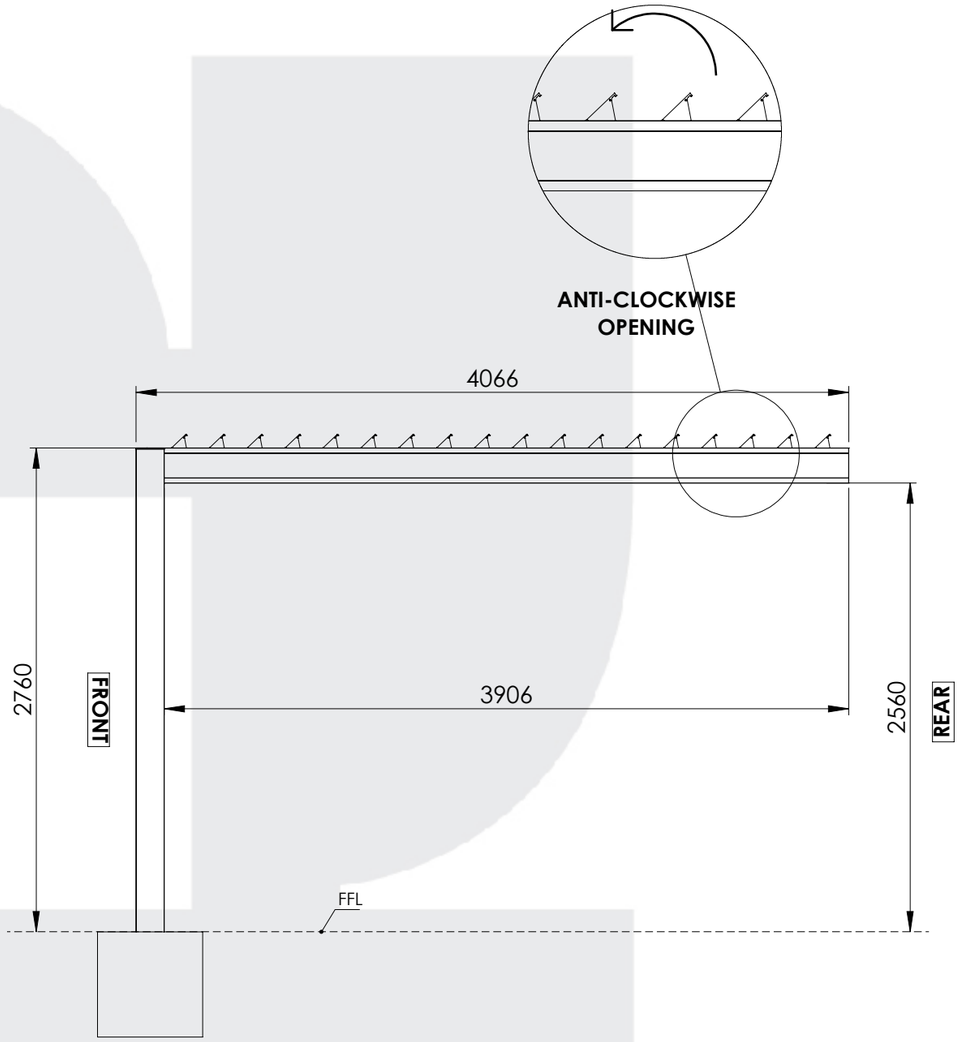

RIGHT SIDE VIEW (Viewed From Outside)
SCALE 1 : 35

MORVELLE

Installer: Amanda's Verandas		Signature	Rev No: 1
Date: 10.11.26	Drawn By: AA	Unit: Millimeter	**A3**

www.morvelle.com